Crompton
Lighting

Sagitta

20W / 40W CRCA Batten

Even illumination, optimum performance

Sagitta is highly robust and reliable with strong CRCA construction. The batten can be easily installed with mounting brackets provided for conduit, suspended & surface mounting applications. Sagitta illuminates the space uniformly, ensuring an efficient and consistent illumination

>100 Lm/W &
>120 Lm/W
lumen efficiency

IP20

IK02

EMI/EMC, CISPR 15
compliant

www.crompton.co.in

Sagitta

20W / 40W CRCA Batten

- Available in **5700K CCT** as standard with **3000K & 4000K** available on request
- Made available with assured warranty of **2-5 years**
- THD < 10%
- PF ≥ 0.95
- RATED VOLTAGE **240**
- CRI **80**

ISO 9001 | BIS | ROHS

Crompton Lighting

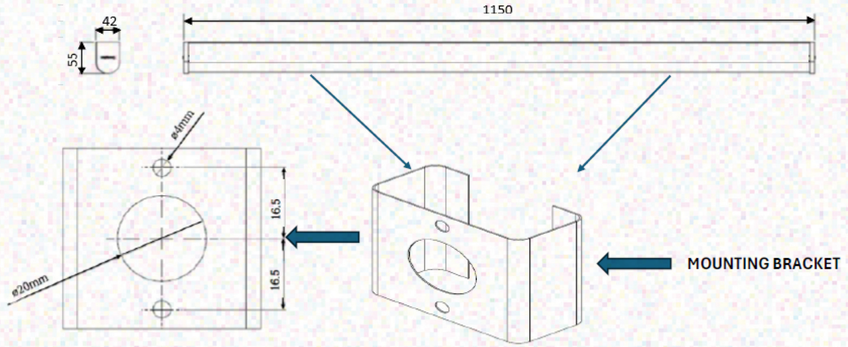

	Trade Product Cat. Ref.	Wattage (W)	Mains Current (A)	Approx. Wt. (Kg)
CIS-351-40-57-SL-DP-NWH	TIS-351-40-57-SL-DP-NWH	40W	0.15-0.25	1.2
CIS-351-40-57-HL2-DP-NWH	TIS-351-40-57-HL2-DP-NWH	40W	0.15-0.25	1.2
CIS-350-20-57-SL-DP-NWH	TIS-350-20-57-SL-DP-NWH	20W	0.12	1.2
CIS-350-20-57-HL2-DP-NWH	TIS-350-20-57-HL2-DP-NWH	20W	0.12	1.2

* Only for structural/mounting design consideration

** Rated system wattage and current will have tolerance as per is 16104: 2012

80+ YEARS OF ILLUMINATING INDIA

Crompton Greaves Consumer Electricals Limited
05GBD, Godrej Business District, Pirojshanagar, Vikhroli (West), Mumbai, Maharashtra - 400079, India
www.crompton.co.in