Full parts view

MA0303

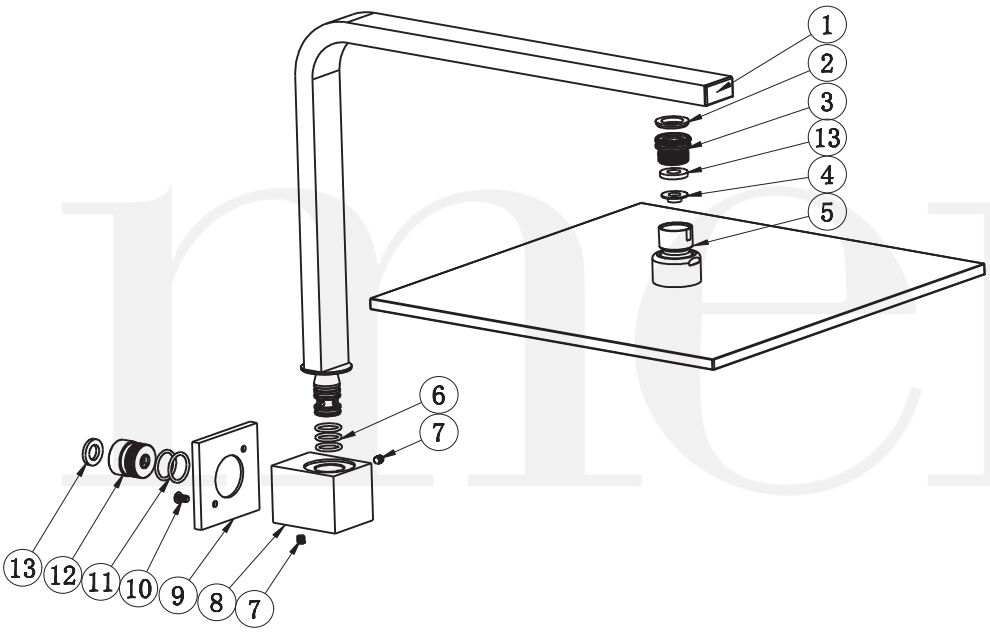

Item	Description
1	Shower arm
2	Flat washer
3	Connector
4	Flow controller
5	Shower rose
6	O-ring
7	Screw
8	Eblow
9	Back plate
10	Screw
11	O-ring
12	Connector
13	Flat washer

meir.®

Designed with the assistance of leading Australian architects,
Meir crafts each piece from concept to production at the highest standards.
Copyright © Meir Australia Pty Ltd 2004 - 2018. www.meir.com.au