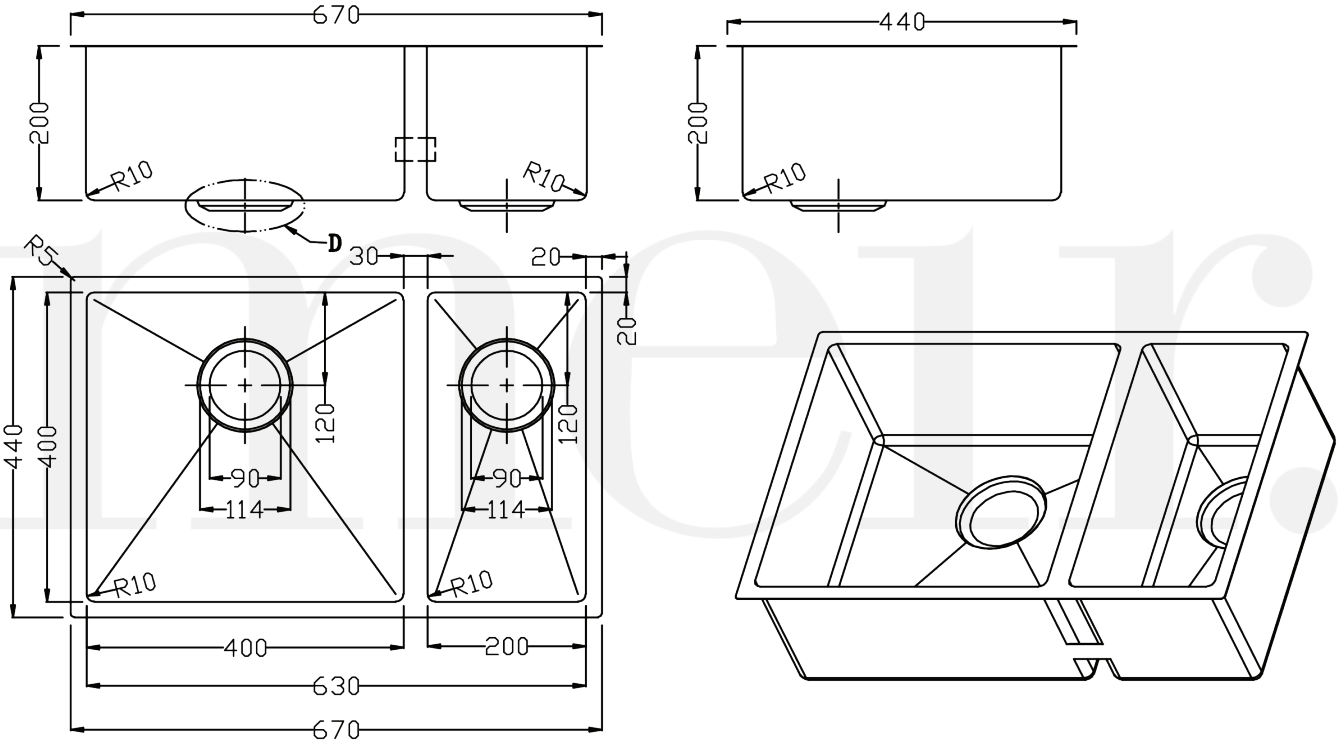

∅ Circle

Designed with the assistance of leading Australian architects,
Meir crafts each piece from concept to production at the highest standards.
© Copyright 2021 Meir. www.meir.com.au