CARE AND SAFETY GUIDELINES

Rattan sofa sets aren't as difficult and high maintenance as other garden furniture. We suggest covering rattan furniture with our rain covers to prevent ware and tare and increase its life span. Upgrading to rattan furniture has so many advantages compared to other types of garden furniture and one of them is the fact that they're low-maintenance. All our PVC rattan furniture are water resistant for light rain.

Cleaning rattan furniture is as easy as one, two, three. Fill a bucket with warm water, fairy liquid and gently scrub the furniture with a cloth. This method would be ideal to pick up dust and liquid stains. We'd also suggest using a garden hose or jet wash to remove dirt and grime. We highly recommend using the lowest power on the jet wash at the far distance to prevent ware and tare.

For another simple yet cost effective method would be with a soft bristled brush to dust of any little bit sand pieces in between each weave. Cleaning rattan furniture every so often is important as dirt could accumulate and create bacteria.

Glass topped tables can be easily cleaned with cleaning products and newspaper to prevent line marks compared to a cloth.

All our cushions are waterproof and washable, it's recommended to hand wash cushion covers. Finally, we'd also highly recommend not to use any chemical substances on all rattan surfaces.

This product is for outdoor use only!

For assistance with assembly, or to request replacement parts, log onto our website or call Customer Service. DO NOT RETURN THE PRODUCT TO THE STORE.

Si vous avez besoin d'aide pour le montage, ou pour demander des pièces de rechange, connectez-vous sur notre site Web ou appelez le service à la clientèle. NE RETOURNEZ PAS LE PRODUIT AU MAGASIN.

Para obtener ayuda sobre el montaje o para solicitar piezas de repuesto, conéctese a nuestra página web o llame a Atención al cliente. NO DEVUELVA EL PRODUCTO A LA TIENDA.

Wenn Sie Hilfe beim Aufbau oder Ersatzteile benötigen, melden Sie sich auf unserer Webseite an oder rufen Sie unseren Kundenservice an. GEBEN SIE DAS PRODUKT NICHT IM GESCHÄFT ZURÜCK.

Als u hulp nodig heeft bij de montage of vervangende onderdelen wilt bestellen, kunt u inloggen op onze website of bellen met de klantenservice. BRENG HET PRODUCT NIET TERUG NAAR DE WINKEL.

Per assistenza al montaggio, o per richiedere pezzi di ricambio, accedi al nostro sito o chiama il servizio clienti. NON RESTITUIREILPRODOTTOALNEGOZIO.

Para obter ajuda na montagem, ou para solicitar peças de substituição, inicie a sessão no nosso sítio da Internet ou ligue para o Serviço de Apoio ao Cliente. NÃO DEVOLVA O PRODUTO À LOJA.

UK

Tel :+44 808 164 8058

Email : help@yakoe.co.uk

www.furnituremaxi.com

CA

Tel :

Email : info_ca@yakoe.co.uk

www.furnituremaxi.com

5

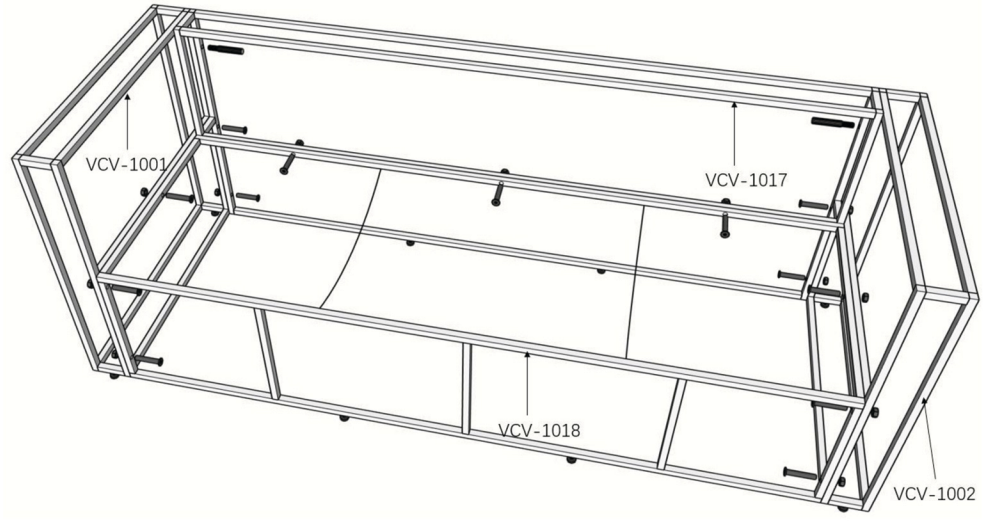

VCV -1002*1

S-1001*5

S-1002*5

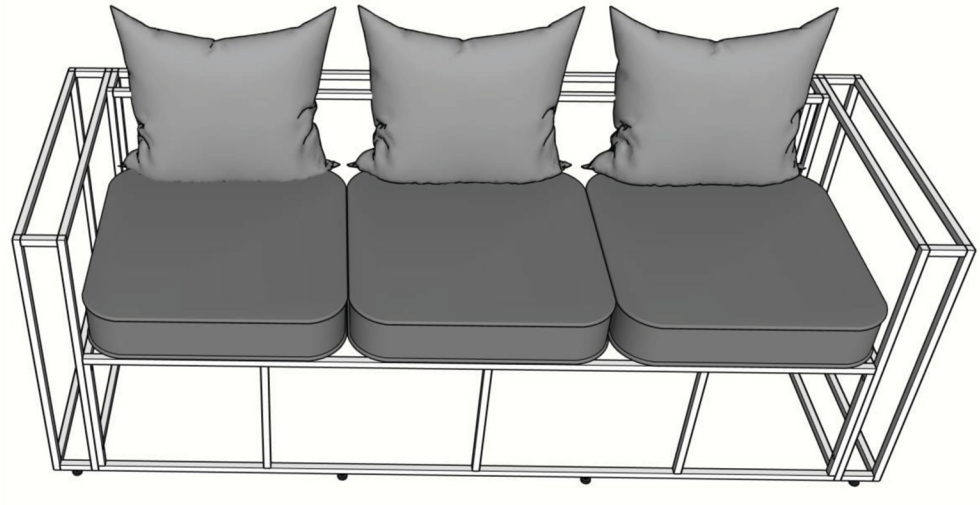

Tight all the screws to 60% first then tight to 100%.

Während der Montage alle Schrauben zuerst 60% anziehen, dann zu 100%.

Serrez toutes les vis à 60% d'abord puis serrez à 100%.

Primero apriete los tornillos al 60% y después al 100%.

4

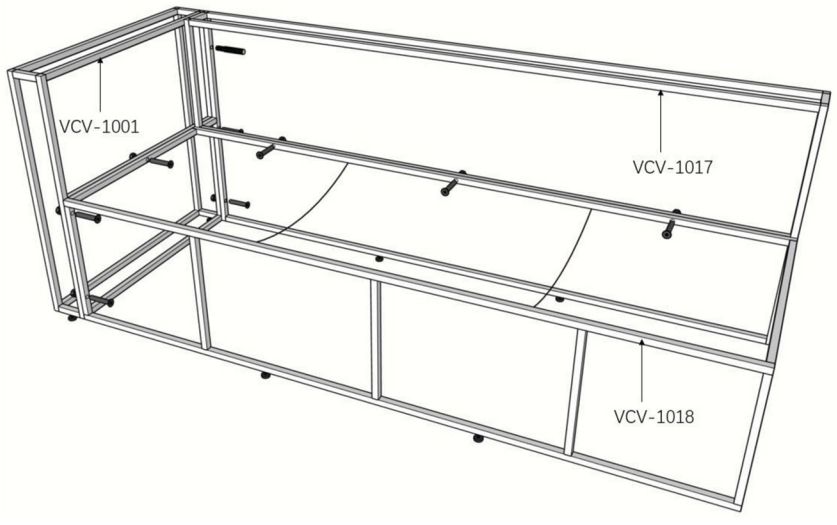

VCV -1018*1

S-1001*6

S-1002*6

4

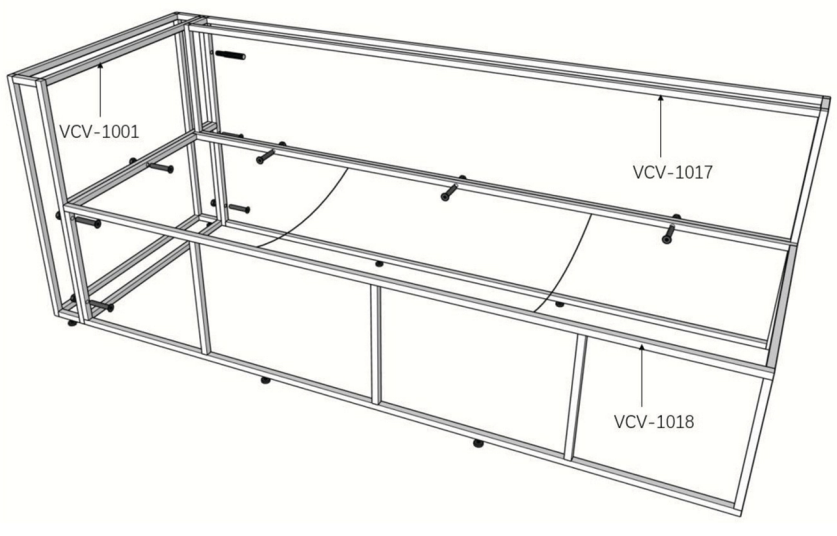

VCV -1018*1

S-1001*6

S-1002*6

Assembly/Montage/Assemblage/Montaje:

1. 3Seater Sofa

1

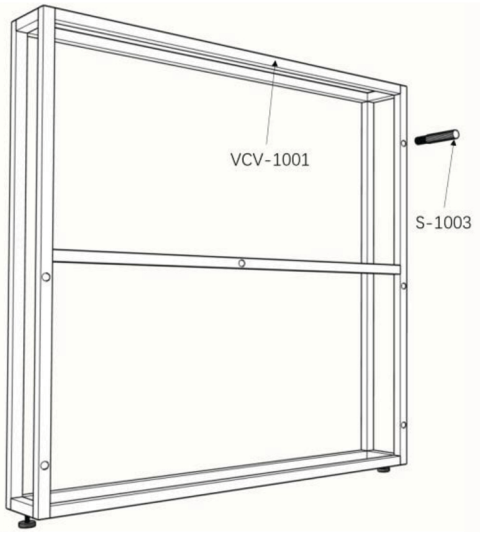

VCV-1001*1

S-1003*1

2

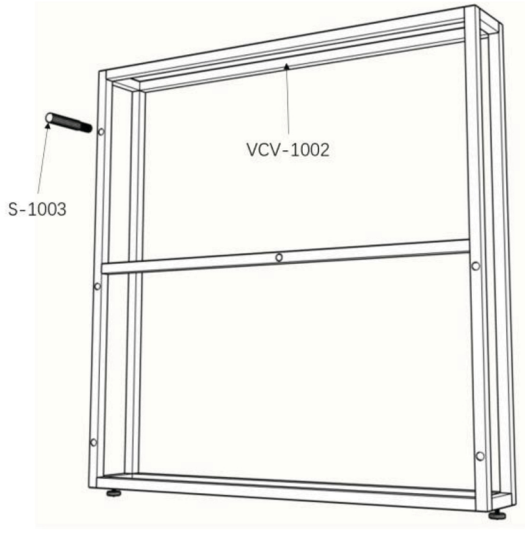

VCV -1002*1

S-1003*1

3

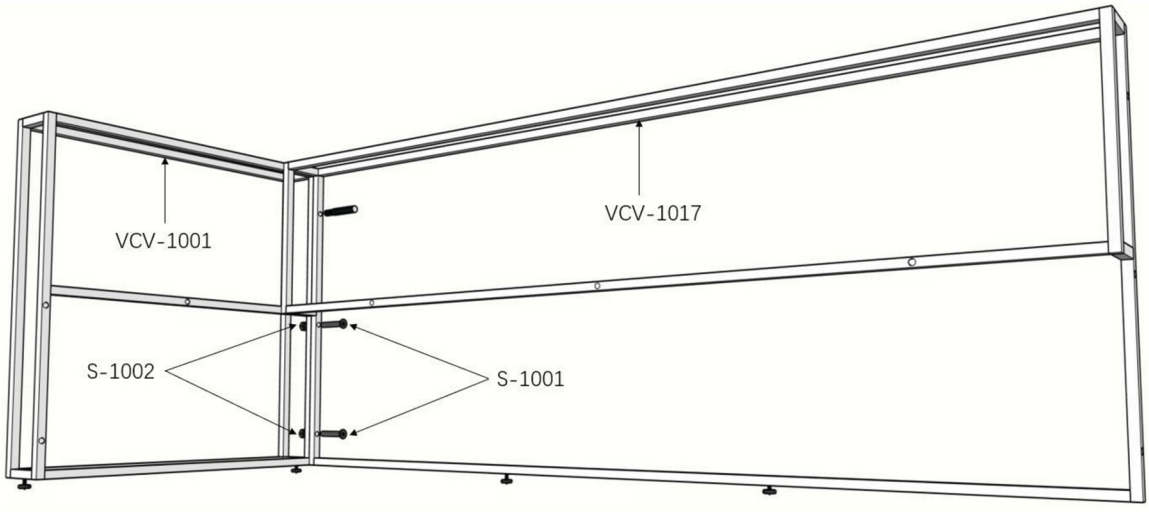

VCV -1017*1

S-1001*2

S-1002*2

YAKOE®

EN DE FR ES

INSTRUCTION MANUAL/BEDIENUNSANLEITUNG/ NOTICE D'UTILISATION/MANUAL DE INSTRUCCIONES

Vancouver 3seater sofa&V5CS_RC

WARNING !

Adults assembly required. During assembly, keep all parts away from children. Check regularly to ensure all fasteners are tight.

WARNUNG !

Die Montage ist von Erwachsenen durchzuführen. Halten Sie während der Montage alle Teile von Kindern fern. Überprüfen Sie regelmäßig den festen Sitz der Schrauben.

Attention !

Montage à effectuer par des adultes.Pendant le montage, tenez les élémentséloignés des enfants. Vérifiez régulièrement que toutes les vissoient serrées.

¡Atención !

Se requiere que el montaje sea llevado a cabo por un adulto. Durante el montaje, mantengatodas las piezas fuera delalcance de los niños. Verifique regularmente que todos los tornillos esténcorrectamente apretados.

Parts List/Stückliste/Parts List/Listado de piezas:

Carton/Karton/Carton/Caja 22862

VCV-1001 1pc	VCV-1002 1pc	VCV-1018 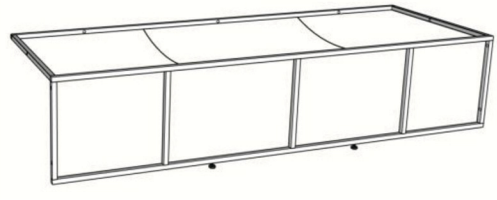 1pc	VCV-1008 3pcs
VCV-1017 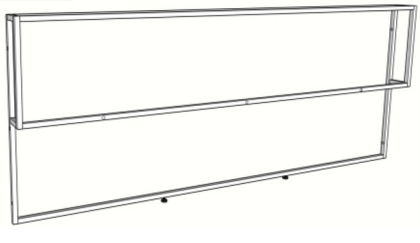 1pc	VCV-1009 3pcs	S-1002(M6) 13pcs	S-1003(M6) 2pcs
T-1001(M6) 1pc	T-1002(M6) 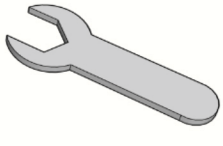 1pc	S-1005(Installed) 8pcs	S-1001(M6*60) 13pcs	V5CS_RC 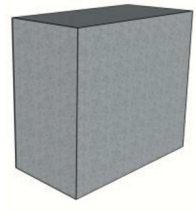 1pc

RETAIN FOR FUTURE REFERENCE

FÜR KÜNFTIGE VERWENDUNG AUFBEWAHREN

A CONSERVER POUR UNE UTILISATION FUTURE

CONSERVAR PARA SER LEÍDO POR CADA NUEVO USUARIO, ANTES DE UTILIZAR EL ARTÍCULO POR PRIMERA VEZ

CARE AND SAFETY GUIDELINES

Rattan sofa sets aren't as difficult and high maintenance as other garden furniture. We suggest covering rattan furniture with our rain covers to prevent ware and tare and increase its life span. Upgrading to rattan furniture has so many advantages compared to other types of garden furniture and one of them is the fact that they're low-maintenance. All our PVC rattan furniture are water resistant for light rain.

Cleaning rattan furniture is as easy as one, two, three. Fill a bucket with warm water, fairy liquid and gently scrub the furniture with a cloth. This method would be ideal to pick up dust and liquid stains. We'd also suggest using a garden hose or jet wash to remove dirt and grime. We highly recommend using the lowest power on the jet wash at the far distance to prevent ware and tare.

For another simple yet cost effective method would be with a soft bristled brush to dust of any little bit sand pieces in between each weave. Cleaning rattan furniture every so often is important as dirt could accumulate and create bacteria.

Glass topped tables can be easily cleaned with cleaning products and newspaper to prevent line marks compared to a cloth.

All our cushions are waterproof and washable, it's recommended to hand wash cushion covers. Finally, we'd also highly recommend not to use any chemical substances on all rattan surfaces.

This product is for outdoor use only!

For assistance with assembly, or to request replacement parts, log onto our website or call Customer Service. DO NOT RETURN THE PRODUCT TO THE STORE.

Si vous avez besoin d'aide pour le montage, ou pour demander des pièces de rechange, connectez-vous sur notre site Web ou appelez le service à la clientèle. NE RETOURNEZ PAS LE PRODUIT AU MAGASIN.

Para obtener ayuda sobre el montaje o para solicitar piezas de repuesto, conéctese a nuestra página web o llame a Atención al cliente. NO DEVUELVA EL PRODUCTO A LA TIENDA.

Wenn Sie Hilfe beim Aufbau oder Ersatzteile benötigen, melden Sie sich auf unserer Webseite an oder rufen Sie unseren Kundenservice an. GEBEN SIE DAS PRODUKT NICHT IM GESCHÄFT ZURÜCK.

Als u hulp nodig heeft bij de montage of vervangende onderdelen wilt bestellen, kunt u inloggen op onze website of bellen met de klantenservice. BRENG HET PRODUCT NIET TERUG NAAR DE WINKEL.

Per assistenza al montaggio, o per richiedere pezzi di ricambio, accedi al nostro sito o chiama il servizio clienti. NON RESTITUIREILPRODOTTOALNEGOZIO.

Para obter ajuda na montagem, ou para solicitar peças de substituição, inicie a sessão no nosso sítio da Internet ou ligue para o Serviço de Apoio ao Cliente. NÃO DEVOLVA O PRODUTO À LOJA.

UK

Tel :+44 808 164 8058

Email : help@yakoe.co.uk

www.furnituremaxi.com

CA

Tel :

Email : info_ca@yakoe.co.uk

www.furnituremaxi.com

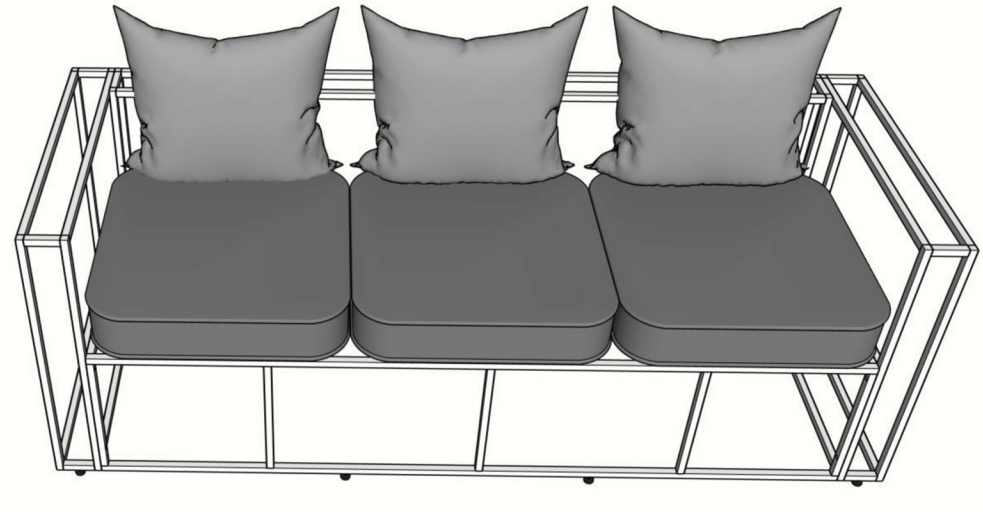

Tight all the screws to 60% first then tight to 100%.

Während der Montage alle Schrauben zuerst 60% anziehen, dann zu 100%.

Serrez toutes les vis à 60% d'abord puis serrez à 100%.

Primero apriete los tornillos al 60% y después al 100%.

4

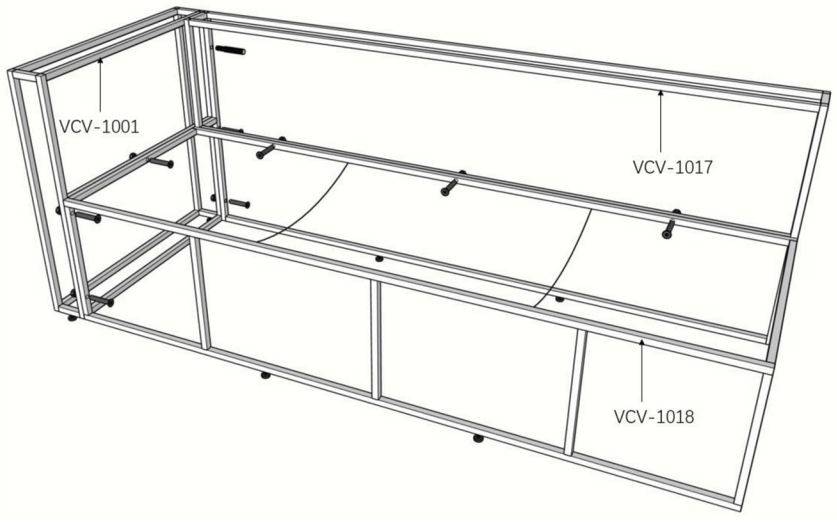

VCV -1018*1

S-1001*6

S-1002*6

5

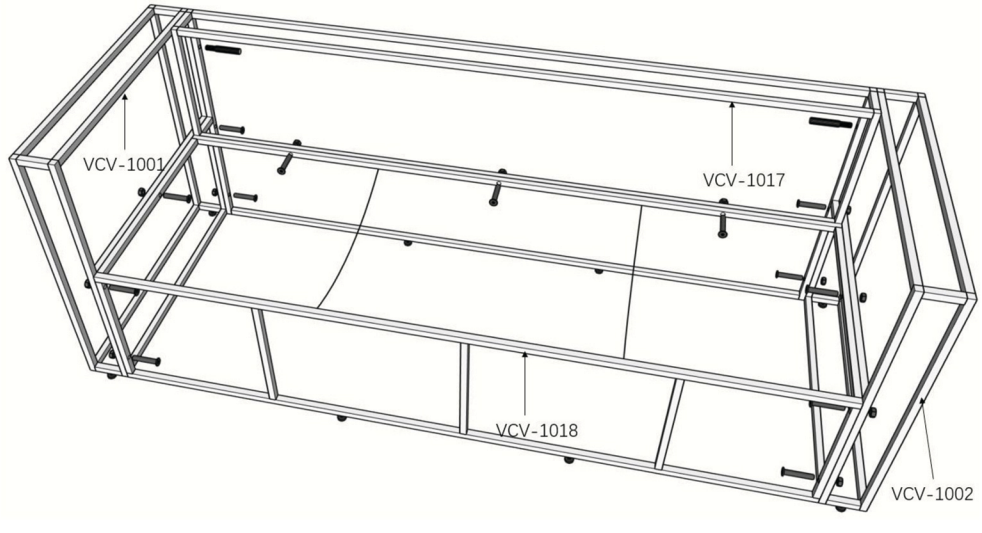

VCV -1002*1

S-1001*5

S-1002*5

Assembly/Montage/Assemblage/Montaje:

1. 3Seater Sofa

1

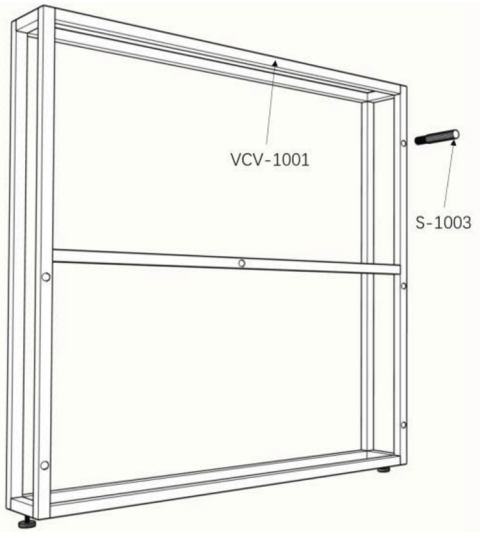

VCV-1001*1

S-1003*1

2

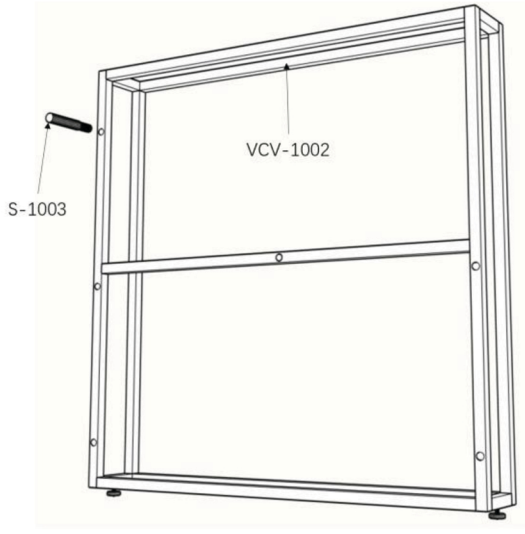

VCV -1002*1

S-1003*1

3

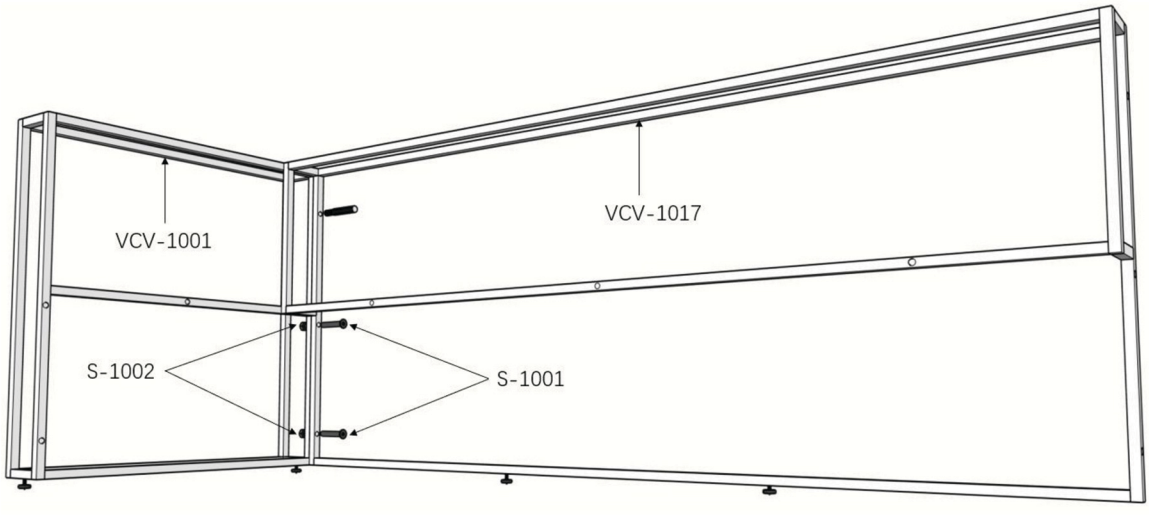

VCV -1017*1

S-1001*2

S-1002*2

YAKOE®

EN DE FR ES

Vancouver 3seater sofa

INSTRUCTION MANUAL/BEDIENUNSANLEITUNG/ NOTICE D'UTILISATION/MANUAL DE INSTRUCCIONES

WARNING !

Adults assembly required. During assembly, keep all parts away from children. Check regularly to ensure all fasteners are tight.

WARNUNG !

Die Montage ist von Erwachsenen durchzuführen. Halten Sie während der Montage alle Teile von Kindern fern. Überprüfen Sie regelmäßig den festen Sitz der Schrauben.

Attention !

Montage à effectuer par des adultes.Pendant le montage, tenez les élémentséloignés des enfants. Vérifiez régulièrement que toutes les vissoient serrées.

¡Atención !

Se requiere que el montaje sea llevado a cabo por un adulto. Durante el montaje, mantengatodas las piezas fuera delalcance de los niños. Verifique regularmente que todos los tornillos esténcorrectamente apretados.

Parts List/Stückliste/Parts List/Listado de piezas:

Carton/Karton/Carton/Caja 22861

VCV-1001 1pc	VCV-1002 1pc	VCV-1018 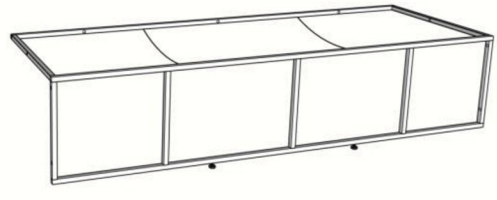 1pc	VCV-1008 3pcs
VCV-1017 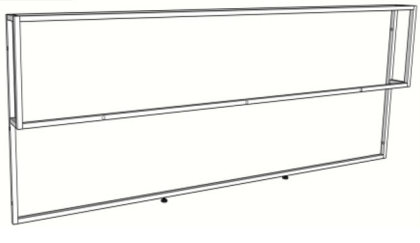 1pc	VCV-1009 3pcs	S-1002(M6) 13pcs	S-1003(M6) 2pcs
T-1001(M6) 1pc	T-1002(M6) 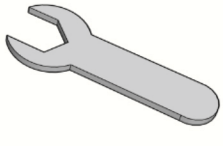 1pc	S-1005(Installed) 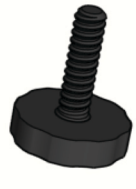 8pcs	S-1001(M6*60) 13pcs

RETAIN FOR FUTURE REFERENCE

FÜR KÜNFTIGE VERWENDUNG AUFBEWAHREN

A CONSERVER POUR UNE UTILISATION FUTURE

CONSERVAR PARA SER LEÍDO POR CADA NUEVO USUARIO, ANTES DE UTILIZAR EL ARTÍCULO POR PRIMERA VEZ

CARE AND SAFETY GUIDELINES

Rattan sofa sets aren't as difficult and high maintenance as other garden furniture. We suggest covering rattan furniture with our rain covers to prevent ware and tare and increase its life span. Upgrading to rattan furniture has so many advantages compared to other types of garden furniture and one of them is the fact that they're low-maintenance. All our PVC rattan furniture are water resistant for light rain.

Cleaning rattan furniture is as easy as one, two, three. Fill a bucket with warm water, fairy liquid and gently scrub the furniture with a cloth. This method would be ideal to pick up dust and liquid stains. We'd also suggest using a garden hose or jet wash to remove dirt and grime. We highly recommend using the lowest power on the jet wash at the far distance to prevent ware and tare.

For another simple yet cost effective method would be with a soft bristled brush to dust of any little bit sand pieces in between each weave. Cleaning rattan furniture every so often is important as dirt could accumulate and create bacteria.

Glass topped tables can be easily cleaned with cleaning products and newspaper to prevent line marks compared to a cloth.

All our cushions are waterproof and washable, it's recommended to hand wash cushion covers. Finally, we'd also highly recommend not to use any chemical substances on all rattan surfaces.

This product is for outdoor use only!

For assistance with assembly, or to request replacement parts, log onto our website or call Customer Service. DO NOT RETURN THE PRODUCT TO THE STORE.

Si vous avez besoin d'aide pour le montage, ou pour demander des pièces de rechange, connectez-vous sur notre site Web ou appelez le service à la clientèle. NE RETOURNEZ PAS LE PRODUIT AU MAGASIN.

Para obtener ayuda sobre el montaje o para solicitar piezas de repuesto, conéctese a nuestra página web o llame a Atención al cliente. NO DEVUELVA EL PRODUCTO A LA TIENDA.

Wenn Sie Hilfe beim Aufbau oder Ersatzteile benötigen, melden Sie sich auf unserer Webseite an oder rufen Sie unseren Kundenservice an. GEBEN SIE DAS PRODUKT NICHT IM GESCHÄFT ZURÜCK.

Als u hulp nodig heeft bij de montage of vervangende onderdelen wilt bestellen, kunt u inloggen op onze website of bellen met de klantenservice. BRENG HET PRODUCT NIET TERUG NAAR DE WINKEL.

Per assistenza al montaggio, o per richiedere pezzi di ricambio, accedi al nostro sito o chiama il servizio clienti. NON RESTITUIREILPRODOTTOALNEGOZIO.

Para obter ajuda na montagem, ou para solicitar peças de substituição, inicie a sessão no nosso sítio da Internet ou ligue para o Serviço de Apoio ao Cliente. NÃO DEVOLVA O PRODUTO À LOJA.

UK

Tel :+44 808 164 8058

Email : help@yakoe.co.uk

www.furnituremaxi.com

CA

Tel :

Email : info_ca@yakoe.co.uk

www.furnituremaxi.com

3

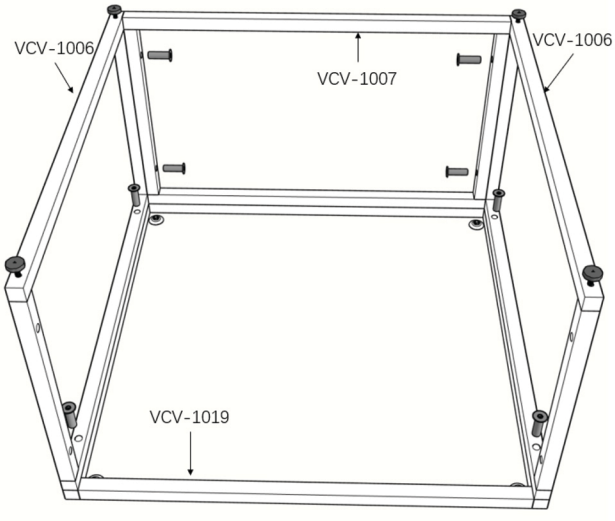

VCV-1006*1

S-1004*4

4

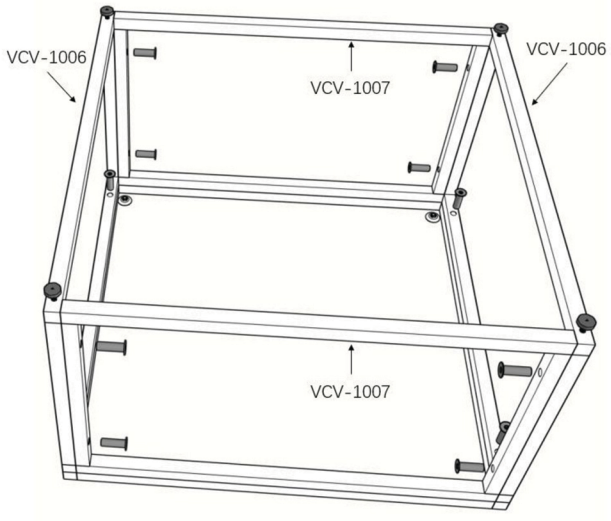

VCV-1007*1

S-1004*4

5

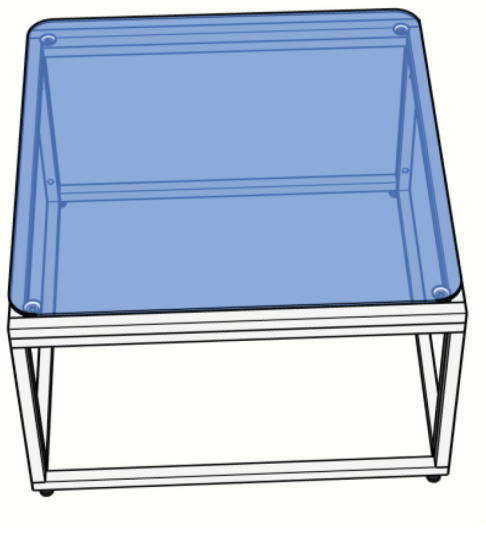

Tight all the screws to 60% first then tight to 100%.

Während der Montage alle Schrauben zuerst 60% anziehen, dann zu 100%.

Serrez toutes les vis à 60% d'abord puis serrez à 100%.

Primero apriete los tornillos al 60% y después al 100%.

5

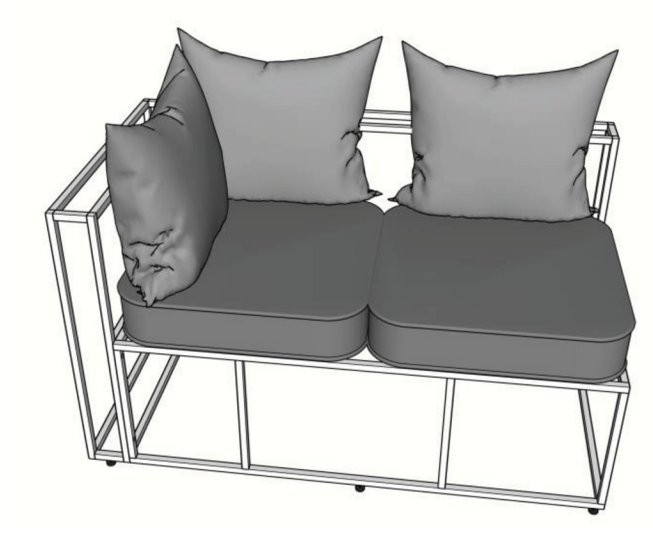

2. Square coffee table

1

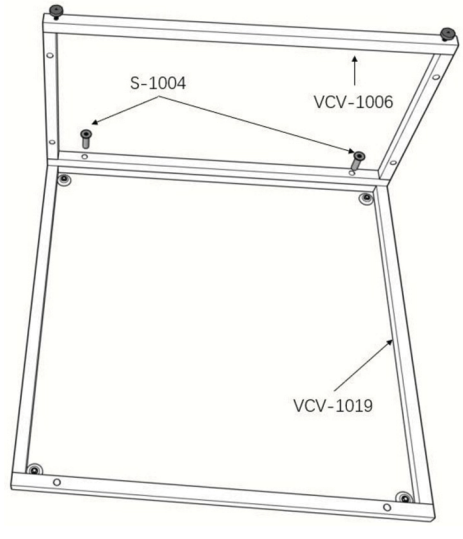

VCV-1019*1

VCV-1006*1

S-1004*2

2

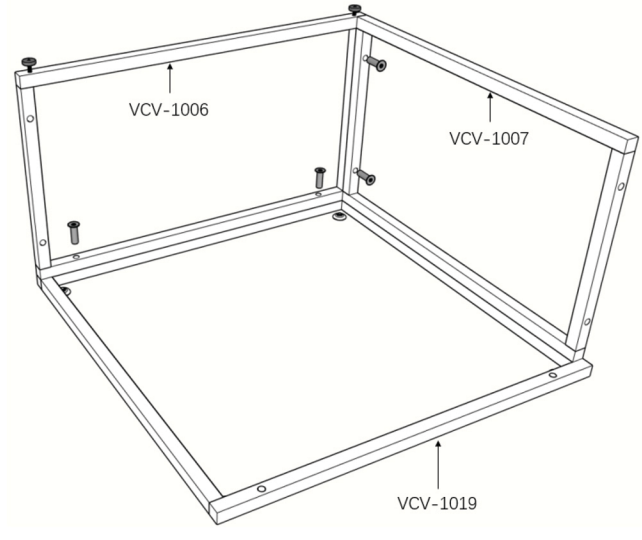

VCV-1007*1

S-1004*2

2

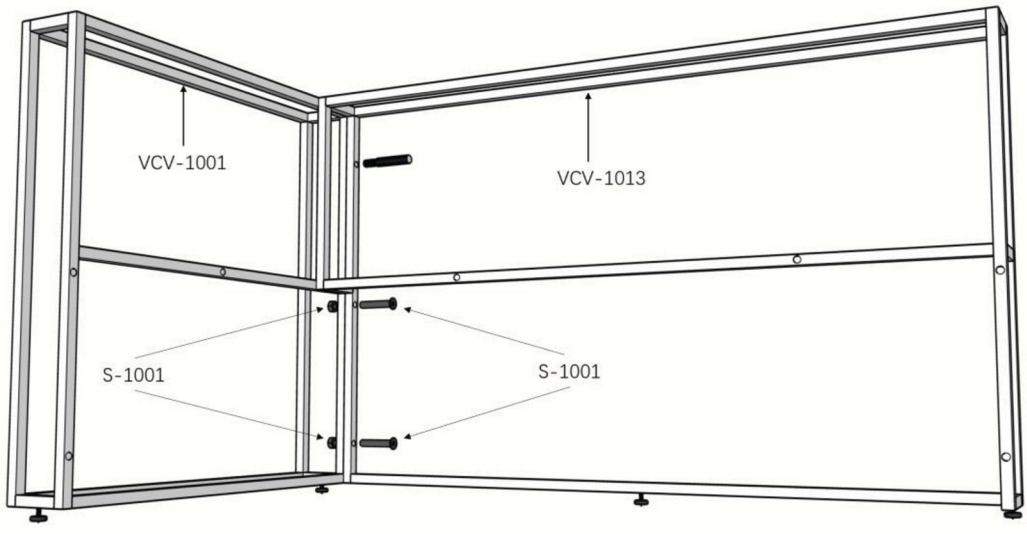

VCV-1013*1

S-1001*2

S-1002*2

3

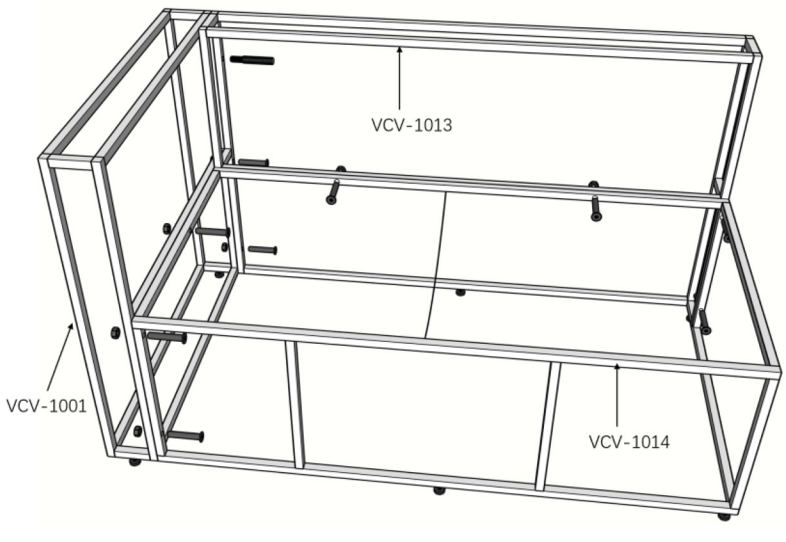

VCV -1014*1

S-1001*7

S-1002*7

S-1004(M6*35)	T-1001(M6)	T-1002(M6)	S-1005(Installed)	G-1001
		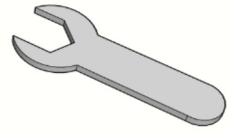		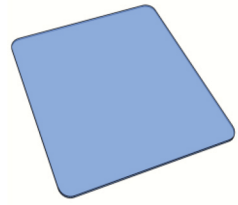
12pcs	1pc	1pc	10pcs	1pc

RETAIN FOR FUTURE REFERENCE

FÜR KÜNFTIGE VERWENDUNG AUFBEWAHREN

A CONSERVER POUR UNE UTILISATION FUTURE

CONSERVAR PARA SER LEÍDO POR CADA NUEVO USUARIO, ANTES DE UTILIZAR EL ARTÍCULO POR PRIMERA VEZ

Assembly/Montage/Assemblage/Montaje:

1. Left arm(seating) 2 seater corner sofa

1

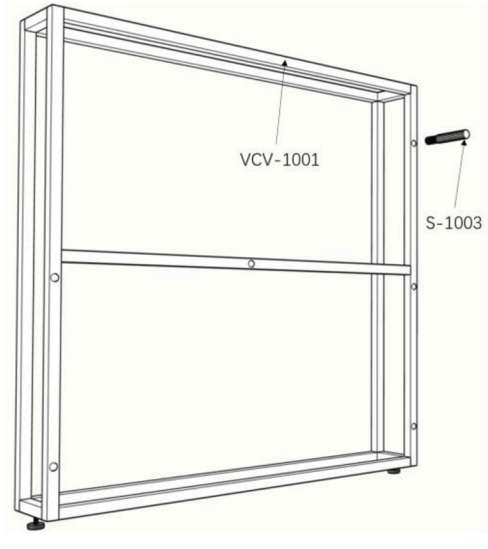

VCV-1001*1

S-1003*1

YAKOE®

EN DE FR ES

INSTRUCTION MANUAL/BEDIENUNSANLEITUNG/ NOTICE D'UTILISATION/MANUAL DE INSTRUCCIONES

Vancouver right arm 2seater corner sofa & square coffee table

WARNING !
Adults assembly required. During assembly, keep all parts away from children. Check regularly to ensure all fasteners are tight.

WARNUNG !
Die Montage ist von Erwachsenen durchzuführen. Halten Sie während der Montage alle Teile von Kindern fern. Überprüfen Sie regelmäßig den festen Sitz der Schrauben.

Attention !
Montage à effectuer par des adultes.Pendant le montage, tenez les éléments éloignés des enfants. Vérifiez régulièrement que toutes les vissoient serrées.

¡Atención !
Se requiere que el montaje sea llevado a cabo por un adulto. Durante el montaje, mantengatodas las piezas fuera delalcance de los niños. Verifique regularmente que todos los tornillos esténcorrectamente apretados.

Parts List/Stückliste/Parts List/Listado de piezas:

Carton/Karton/Carton/Caja 22860，22863

VCV-1001 1pc	VCV-1013 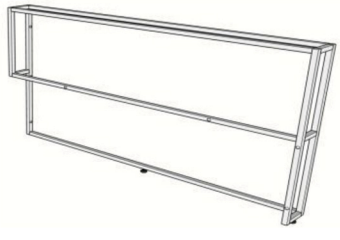 1pc	VCV-1014 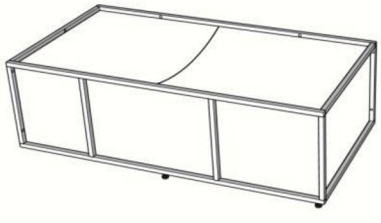 1pc
VCV-1006 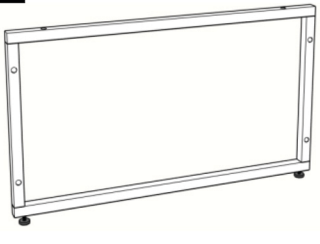 2pcs	VCV-1007 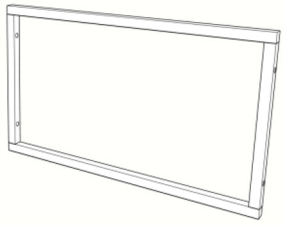 2pcs	VCV-1019 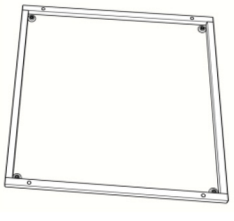 1pc
VCV-1009 2pcs	VCV-1008 3pcs	S-1001(M6*60) 9pcs
S-1002(M6) 9pcs	S-1003(M6) 1pc	