FURRION

21” 2-IN-1 RANGE OVEN WITH DIE-CAST GRATE

+ DRAWER (OPTION)

FS21DB4A

FS21DB4A-BL
FDO12A-BL

FS21DB4A-SS
FDO12A-SS

FS21DB4A-SB
FDO12A-SB

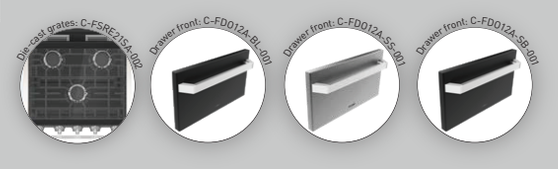

17”/ 21”

PROFILE OPTIONS

CAVITY LIGHTING

LED KNOB

IMPROVED HEAT DISTRIBUTION

BROILER FUNCTION

VIBRATIONSMART™

CLIMATESMART™

FLUSH MOUNTED

GLASS COVER

FS21DB4A | 21" 2-IN-1 RANGE OVEN WITH DIE-CAST GRILL (DRAWER OPTION)

Range Oven

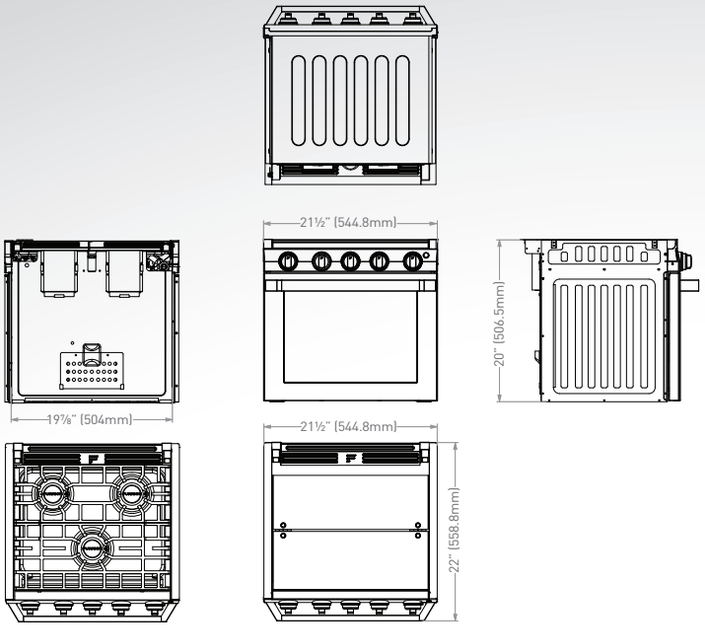

Top view without glass cover

Drawer

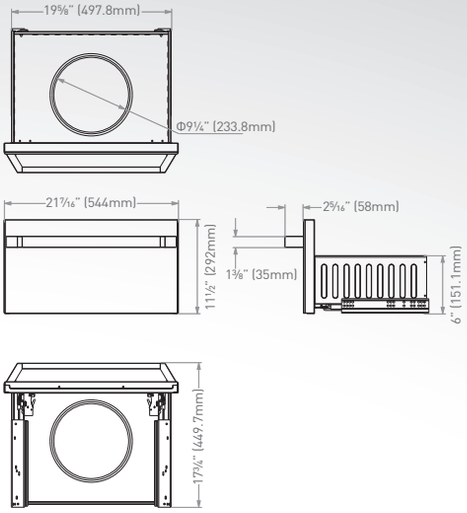

FS21DB4A-SS (Stainless steel) FSRL21CA-BL (Black, with black handle) FS21DB4A-BL (Black, with stainless steel handle) FS21DB4A-SB (Black Stainless Steel, with stainless steel handle)	21" 2-in-1 Range Oven
FD012A-SS (Stainless steel) FD012A-BL (Black, with stainless steel handle) FD012A-SB (Black Stainless Steel, with stainless steel handle)	Drawer for 17"/21" 2-in-1 Range Oven

Specifications

Left Cooktop Burner	6500 BTU
Front Cooktop Burner	8000 BTU
Right Cooktop Burner	6500 BTU
Oven Burner	7100 BTU
Piezo Igniter	√
Cavity Light	12VDC
LED Manual Knob	√
Gas Safety Cut-off Valve	√
Triple Layer Glass Door	√
Glass Cover	2-piece folding cover

Dimensions

Range Oven (W x H x D)	21½" x 21¹¹⁄₁₆" x 22" (544.8 x 500 x 558mm)
Drawer (W x H x D)	21⁷⁄₁₆" x 11½" x 17¾" (544 x 292 x 449.7mm)

Packaging Information (Range Oven)

Packaging Type	Brown Box
Quantity Per Box (pcs)	1
Individual Packaging Dimensions (W x H x D)	25" x 25" x 23¹³⁄₁₆" (635 x 635 x 605mm)
Individual Packaging Gross Weight (kg/lbs)	36.5/80.5
Individual Packaging Net Weight (kg/lbs)	33.0/72.8

Container Load Information

40'HQ Container Load (pcs)	216

Packaging Information (Drawer)

Packaging Type	Brown Box
Quantity Per Box (pcs)	1
Individual Packaging Dimensions (W x H x D)	22⅝" x 13" x 18¹¹⁄₁₆" (574 x 330 x 474mm)
Individual Packaging Gross Weight (kg/lbs)	12/26.5
Individual Packaging Net Weight (kg/lbs)	9/19.8

Container Load Information

40'HQ Container Load (pcs)	650

USA Innovation Center & Institute of Technology: 52567 Independence Ct. Elkhart, IN 46514
Customer Service & Technical Support: Email: support@furrion.com Tel : (888) 354 5792 www.furrion.com

Furrion® and the Furrion logo are trademarks licensed for use by Furrion Ltd. and registered in the U.S. and other countries. ©2007-2019 Furrion Ltd.