Hewlett Packard Enterprise

HPE ProLiant BL460c Gen10 Server Blade Maintenance and Service Guide

Abstract

This guide describes identification and maintenance procedures, diagnostic tools, specifications and requirements for hardware components and software. This guide is for an experienced service technician. Hewlett Packard Enterprise assumes you are qualified in the servicing of computer equipment, trained in recognizing hazards in products, and are familiar with weight and stability precautions.

Part Number: 876834-009
Published: April 2020
Edition: 9

Notices

The information contained herein is subject to change without notice. The only warranties for Hewlett Packard Enterprise products and services are set forth in the express warranty statements accompanying such products and services. Nothing herein should be construed as constituting an additional warranty. Hewlett Packard Enterprise shall not be liable for technical or editorial errors or omissions contained herein.

Confidential computer software. Valid license from Hewlett Packard Enterprise required for possession, use, or copying. Consistent with FAR 12.211 and 12.212, Commercial Computer Software, Computer Software Documentation, and Technical Data for Commercial Items are licensed to the U.S. Government under vendor's standard commercial license.

Links to third-party websites take you outside the Hewlett Packard Enterprise website. Hewlett Packard Enterprise has no control over and is not responsible for information outside the Hewlett Packard Enterprise website.

Acknowledgments

Intel®, and the Intel Inside logo are trademarks of Intel Corporation in the United States and other countries.

Contents

Illustrated parts catalog

Mechanical components

Hewlett Packard Enterprise continually improves and changes product parts. For complete and current supported parts information, see the Hewlett Packard Enterprise PartSurfer website (**http://www.hpe.com/info/partssurfer**).

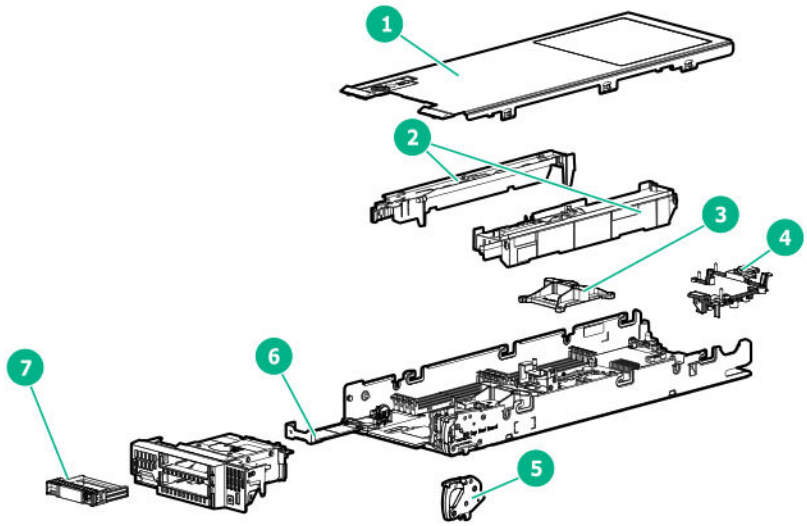

Item	Description
1	**Access panel spare parts**
2	**DIMM baffle spare parts**
3	**Heatsink blank spare parts**
4	**Mezzanine assembly spare parts**
5	**Server blade release lever kit spare parts**
6	**Serial label pull tab spare parts**
7	**Drive blank spare parts**

For more information, see **Removal and replacement procedures**.

Access panel spare parts

Customer self repair: **mandatory**

Description	Spare part number
Access panel	877964-001

DIMM baffle spare parts

Customer self repair: **mandatory**

Description	Spare part number
DIMM baffle, right	877967-001
DIMM baffle, left	877968-001

Heatsink blank spare parts

Customer self repair: **mandatory**

Description	Spare part number
Heatsink blank	877969-001

Mezzanine assembly spare parts

Customer self repair: **optional**

Description	Spare part number
Mezzanine assembly	784960-001

Server blade release lever kit spare parts

Customer self repair: **optional**

Description	Spare part number
Server blade release lever assembly, release lever bracket, and T-15 screws (4)	688895-001

Serial label pull tab spare parts

Customer self repair: **optional**

Description	Spare part number
Serial label pull tab	777690-001

Drive blank spare parts

Customer self repair: **mandatory**

Description	Spare part number
Drive blank	670033-001

System components

Hewlett Packard Enterprise continually improves and changes product parts. For complete and current supported parts information, see the Hewlett Packard Enterprise PartSurfer website (**http://www.hpe.com/info/partssurfer**).

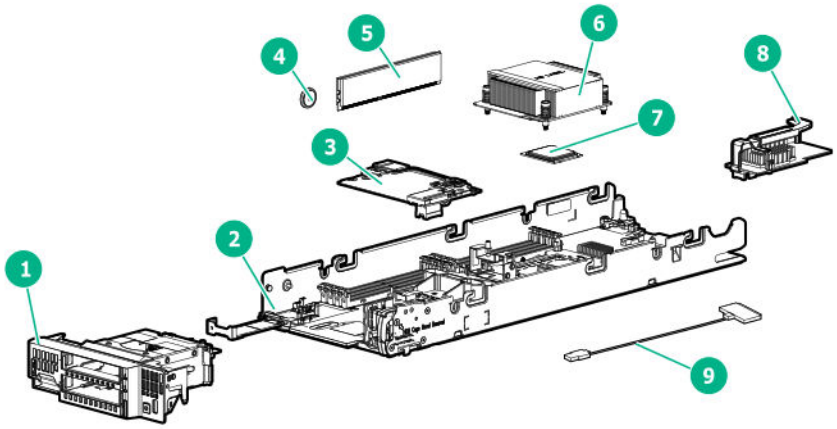

Item	Description
1	**Front panel/drive cage assembly spare parts**
2	**System board with base pan spare parts**
3	**Storage controller/NVMe pass-through board spare parts**
4	**System battery spare part**
5	**DIMM spare parts**
—	**HPE 16GB NVDIMM spare part**
6	**Heatsink spare parts**
7	• **First-generation Intel Xeon Scalable Processor spare parts** • **Second-generation Intel Xeon Scalable Processor spare parts**
8	**FlexibleLOM adapter spare parts**
9	**Direct connect SATA cable spare parts**

For more information, see **Removal and replacement procedures**.

Front panel/drive cage assembly spare parts

Customer self repair: **optional**

Description	Spare part number
Front panel/drive cage assembly	877973-001

System board with base pan spare parts

Customer self repair: **optional**

Description	Spare part number
System board with base pan (supports only First Generation Intel Xeon Scalable Processors)	875625-001
System board with base pan (supports both First and Second Generation Intel Xeon Scalable Processors)	P11566-001

Storage controller/NVMe pass-through board spare parts

Customer self repair: **optional**

Description	Spare part number
HPE Smart Array P204i-b SR Controller	836263-001
HPE Smart Array P408e-m SR Controller	836264-001
NVMe pass-through board	877975-001

System battery spare part

Customer self repair: **mandatory**

Description	Spare part number
System battery	319603-001

DIMM spare parts

Customer self repair: **mandatory**

Table 1: 2666 MT/s DIMMs

Description	Spare part number
8-GB, 1Gx8 PC4-2666V-R	850879-001
16-GB, 2Gx4 PC4-2666V-R	850880-001
16-GB, 1Gx8 PC4-2666V-R	868846-001
32-GB, 2Gx4 PC4-2666V-R	850881-001
64-GB, 2Gx4 PC4-2666V-L	850882-001
128-GB, 2Gx4 PC4-2666L-R	850883-001

Table 2: 2933 MT/s DIMMs

Description	Spare part number
8-GB, 1Rx8, PC4-2933Y-R	P06186-001
16-GB, 1Rx4 PC4-2933Y-R	P06187-001
16-GB, 2Rx8 PC4-2933Y-R	P06188-001

Table Continued

Description	Spare part number
16-GB, 2Rx8 PC4-2933Y-R SAM	P12416-001
32-GB, 2Rx4 PC4-2933Y-R	P06189-001
32-GB, 2Rx4 PC4-2933Y-R SAM	P12417-001
64-GB, 4Rx4 PC4-2933Y-L	P06190-001
64-GB, 2Rx4 PC4-2933Y-R	P06192-001
64-GB, 2Rx4 PC4-2933Y-R SAM	P12418-001
128-GB, 8Rx4 PC4-2933Y-L 3DS	P06191-001

HPE 16GB NVDIMM spare part

Customer self repair: **mandatory**

Description	Spare part number
NVDIMM 16GB 1Rx4 NN4-2666V-R	874540-001

Heatsink spare parts

Customer self repair: **no**

Description	Spare part number
Processor 1 heatsink	877966-001
Processor 2 heatsink	877965-001

First-generation Intel Xeon Scalable Processor spare parts

Customer self repair: **no**

Do not mix processors with different speeds or cache sizes.

Table 3: 31XX processors

Description	Spare part number
Xeon-B 3104 6c 1.7-GHz 85W	875709-001

Table 4: 41XX processors

Description	Spare part number
Xeon-S 4110 8c 2.1-GHz 85W	875711-001
Xeon-S 4112 4c 2.6-GHz 85W	875714-001
Xeon-S 4114 10c 2.2-GHz 85W	875713-001
Xeon-S 4116 12c 2.1-GHz 85W	875716-001

Table 5: 51XX processors

Description	Spare part number
Xeon-G 5115 10c 2.4-GHz 85W	878082-001
Xeon-G 5118 12c 2.3-GHz 105W	875717-001
Xeon-G 5120 14c 2.2-GHz 105W	875718-001
Xeon-G 5122 4c 3.6-GHz 105W	875719-001

Table 6: 61XX processors

Description	Spare part number
Xeon-G 6126 12c 2.6-GHz 125W	875720-001
Xeon-G 6128 6c 3.4-GHz 115W	875721-001
Xeon-G 6130 16c 2.1-GHz 125W	874736-001
Xeon-G 6132 14c 2.6-GHz 133W	875722-001
Xeon-G 6134 8c 3.2-GHz 130W	875723-001
Xeon-G 6136 12c 3.0-GHz 145W	875724-001
Xeon-G 6138 20c 2.0-GHz 125W	874735-001
Xeon-G 6140 18c 2.3-GHz 140W	874734-001
Xeon-G 6142 16c 2.6-GHz 150W	874733-001
Xeon-G 6142M 16c 2.6-GHz 150W	878085-001
Xeon-G 6148 20c 2.4-GHz 150W	874732-001
Xeon-G 6152 22c 2.1-GHz 140W	874730-001

Table 7: 81XX processors

Description	Spare part number
Xeon-P 8153 16c 2.0-GHz 125W	875728-001
Xeon-P 8158 12c 3.0-GHz 150W	875733-001
Xeon-P 8160 24c 2.1-GHz 150W	874729-001
Xeon-P 8164 26c 2.1-GHz 145W	875729-001

Second-generation Intel Xeon Scalable Processor spare parts

Customer self repair: **no**

Do not mix processors with different speeds or cache sizes.

Table 8: 32XX processors

Description	Spare part number
Xeon-B 3204 6c 1.7GHz 85W	P11604-001

Table 9: 42XX processors

Description	Spare part number
Xeon-S 4208 8c 2.1GHz 85W	P11605-001
Xeon-S 4210 10c 2.2GHz 85W	P11606-001
Xeon-S 4214 12c 2.2GHz 85W	P11607-001
Xeon-S 4214Y 12/10/8c 2.2/2.3/2.4GHz 105W	P11636-001
Xeon-S 4215 8c 2.5GHz 85W	P11608-001
Xeon-S 4216 16c 2.2GHz 85W	P11609-001

Table 10: 52XX processors

Description	Spare part number
Xeon-G 5215 10c 2.6GHz 85W	P11610-001
Xeon-G 5217 8c 3.0GHz 115W	P11611-001
Xeon-G 5218 16c 2.3GHz 125W	P11612-011
Xeon-G 5218B 16c 2.3GHz 125W	P12532-001
Xeon-G 5220 18c 2.2GHz 125W	P11613-001
Xeon-G 5220S 18c 2.6GHz 125W	P11627-001
Xeon-G 5222 4c 3.8GHz 105W	P11632-001
Xeon-G 5218 16c 2.3GHz 105W	P12021-001

Table 11: 62XX processors

Description	Spare part number
Xeon-G 6230 20c 2.1GHz 125W	P11614-001
Xeon-G 6240 18c 2.6GHz 150W	P11615-001
Xeon-G 6240Y 18/14/8c 2.6/2.8/3.1GHz 150W	P11637-001
Xeon-G 6242 16c 2.8GHz 150W	P11616-001
Xeon-G 6248 20c 2.5GHz 150W	P11618-001
Xeon-G 6252 24c 2.1GHz 150W	P11619-001
Xeon-G 6226 12c 2.7GHz 125W	P12008-001
Xeon-G 6234 8c 3.3GHz 130W	P12009-001
Xeon-G 6238 22c 2,1GHz 140W	P12010-001
Xeon-G 6222V 20c 1.8GHz 115W	P12019-001
Xeon-G 6262V 24c 1.9GHz 135W	P12020-001

Table 12: 82XX processors

Description	Spare part number
Xeon-P 8253 16c 2.2GHz 125W	P12011-001
Xeon-P 8256 4c 3.8GHz 105W	P12012-001

FlexibleLOM adapter spare parts

Customer self repair: **mandatory**

Description	Spare part number
HPE FlexFabric 10Gb 2-port 534M Adapter	701530-001
HPE FlexFabric 10Gb 2-port 536FLB Adapter	768080-001
HPE Ethernet 10Gb 2-port 560M Adapter	669282-001
HPE Ethernet 10Gb 2-port 560FLB Adapter	656243-001
HPE FlexFabric 20Gb 2-port 630FLB Adapter	701527-001
HPE FlexFabric 20Gb 2-port 630M Adapter	701528-001
HPE FlexFabric 20Gb 2-port 650M Adapter	701535-001
HPE FlexFabric 20Gb 2-port 650FLB Adapter	701536-001

Direct connect SATA cable spare parts

Customer self repair: **mandatory**

Description	Spare part number
Direct connect SATA cable	877979-001

Optional server components

Hewlett Packard Enterprise continually improves and changes product parts. For complete and current supported parts information, see the Hewlett Packard Enterprise PartSurfer website (**http://www.hpe.com/info/partssurfer**).

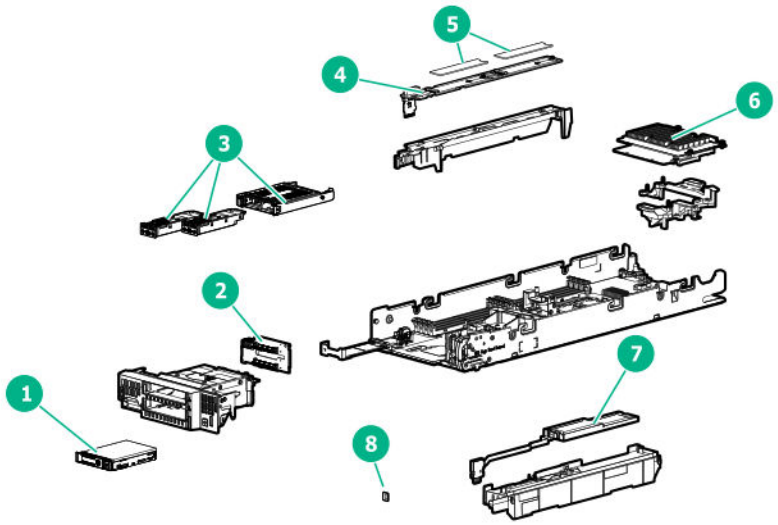

Item	Description
1	**Drive spare parts**
2	**Drive backplane spare parts**
3	**HPE SFF Flash Adapter with dual micro form factor (uFF) SSDs spare parts**
4	**M.2 enablement kit spare parts**
5	**M.2 SSD spare parts**
6	**Mezzanine card option spare parts**
7	**HPE Smart Storage Battery spare parts**
8	**Trusted Platform Module spare parts**

For more information, see **Removal and replacement procedures**.

Drive spare parts

SFF SAS/SATA hard drives

Customer self repair: **mandatory**

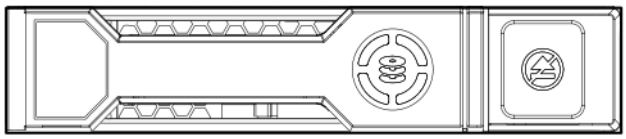

Description	Spare part number
300 GB, HDD, SAS, 12G, 10K, SC, DS	872735-001
300 GB, HDD, SAS, 12G, 15K, SC, DS, ENT	870792-001

Table Continued

Description	Spare part number
600 GB, HDD, SAS, 12G, 10K, SC, DS	872736-001
600 GB, HDD, SAS, 12G, 15K, SC, DS, ENT	870794-001
900 GB, HDD, SAS, 12G, 15K, SC, DS, ENT	870795-001
1 TB, HDD, SATA, 6G, 7.2K, MDL, SC	656108-001
1 TB, HDD, SAS, 12G, 7.5K, MDL, SC	832984-001
1.2 TB, HDD, SAS, 12G, 10K, SC, DS	872737-001
1.8 TB, HDD, SAS, 12G, 10K, 512e, DS, ENT	872738-001
2 TB, HDD, 6G, 7.2K, 512e, SC, MDL	765869-001
2 TB, HDD, 12G, 7.2K, 512e, SC, MDL	765873-001
2.4 TB, HDD, 12G, 10K, 512e, SC, DS	881507-001

More information

Hot-plug drive LED definitions

SFF SAS/SATA SSDs

Customer self repair: **mandatory**

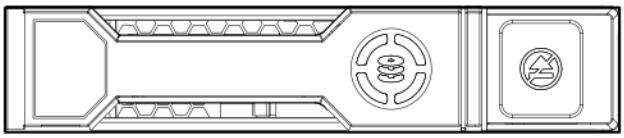

Description	Spare part number
240 GB, SSD, SATA, RI, SC, DS	P08565-001
240 GB, SSD, SATA, RI, SC, DS	P05319-001
240 GB, SSD, SATA, 6G, RI, SC, DS	875652-001
400 GB, SSD, MU, SC, DS	P09922-001
400 GB, SSD, SAS, MU, SC, DS	P06576-001
400 GB, SSD, SAS, WI, SC, DS	P09947-001
400 GB, SSD, SAS, WI, SC, DS	P06600-001
480 GB, SSD, SATA, MU, SC, DS	P09907-001
480 GB, SSD, SATA, MU, SC, DS	P08690-001
480 GB, SSD, SATA, MU, SC, DS	P08620-001
480 GB, SSD, SATA, RI, SC, DS	P06571-001
480 GB, SSD, SATA, RI, SC, DS	P08567-001

Table Continued

Description	Spare part number
480 GB, SSD, SATA, RI, SC, DS	P05320-001
480 GB, SSD, SATA, RI, SC, DS	P05312-001
800 GB, SSD, SAS, MU, SC, DS	P09923-001
800 GB, SSD, SAS, MU, SD, DS	P06577-001
800 GB, SSD, SAS, WI, SC, DS	P09948-001
800 GB, SSD, SAS, WI, SC, DS	P06602-001
960 GB, SSD, SAS, MU, SC, VS, DS	P10604-001
960 GB, SSD, SAS, RI, SC, DS	P08608-001
960 GB, SSD, SAS, RI, SC, DS	P06596-001
960 GB, SSD, SAS, RI, SC, VS, DS	P10637-001
960 GB, SSD, SATA, MU, SC, DS	P09909-001
960 GB, SSD, SATA, MU, SC, DS	P08692-001
960 GB, SSD, SATA, MU, SC, DS	P08622-001
960 GB, SSD, SATA, RI, SC, DS	P06572-001
960 GB, SSD, SATA, RI, SC, DS	P08569-001
960 GB, SSD, SATA, RI, SC, DS	P05321-001
960 GB, SSD, SATA, RI, SC, DS	P05313-001
1.6 TB, SSD, SAS, MU, SC, DS	P09924-001
1.6 TB, SSD, SAS, MU, SC, DS	P06580-001
1.6 TB, SSD, SAS, WI, SC, DS	P09949-001
1.6 TB, SSD, SAS, WI, SC, DS	P06604-001
1.92 TB, SSD, SAS, MU, SC, VS, DS	P10607-001
1.92 TB, SSD, SAS, RI, SC, DS	P08609-001
1.92 TB, SSD, SAS, RI, SC, DS	P06597-001
1.92 TB, SSD, SAS, RI, SC, VS, DS	P10638-001
1.92 TB, SSD, SATA, MU, SC, DS	P09912-001
1.92 TB, SSD, SATA, MU, SC, DS	P08694-001
1.92 TB, SSD, SATA, MU, SC, DS	P08625-001
1.92 TB, SSD, SATA, RI, SC, DS	P06573-001
1.92 TB, SSD, SATA, RI, SC, DS	P08572-001
1.92 TB, SSD, SATA, RI, SC, DS	P05322-001
1.92 TB, SSD, SATA, RI, SC, DS	P05314-001
3.2 TB, SSD, MU, SC, DS	P09925-001

Table Continued

Description	Spare part number
3.2 TB, SSD, SAS, MU, SC, DS	P06582-001
3.2 TB, SSD, SAS, WI, SC, DS	P06605-001
3.84 TB, SSD, SAS, MU, SC, VS, DS	P10610-001
3.84 TB, SSD, SAS, RI, SC, DS	P08610-001
3.84 TB, SSD, SAS, RI, SC, DS	P06598-001
3.84 TB, SSD, SAS, RI, SC, VS, DS	P10639-001
3.84 TB, SSD, SATA, MU, SC, DS	P08632-001
3.84 TB, SSD, SATA, MU, SC, DS	P02562-001
3.84 TB, SSD, SATA, RI, DS, SC	P06574-001
3.84 TB, SSD, SATA, RI, SC, DS	P08575-001
3.84 TB, SSD, SATA, RI, SC, DS	P05323-001
3.84 TB, SSD, SATA, RI, SC, DS	P05315-001
6.4 TB, SSD, SAS, MU, SC, DS	P09926-001
6.4 TB, SSD, SAS, MU, SC, DS	P06583-001
7.68 TB, SSD, SATA, RI, SC, DS	P08611-001
7.68 TB, SSD, SAS, RI, SC, VS, DS	P10640-001
7.68 TB, SSD, SAS, RI, SC, DS	P06599-001
7.68 TB, SSD, SATA, RI, SC, DS	P05316-001
15.3 TB, SSD, SAS, RI, SC, DS	P08612-001

SFF NVMe drives

Customer self repair: **mandatory**

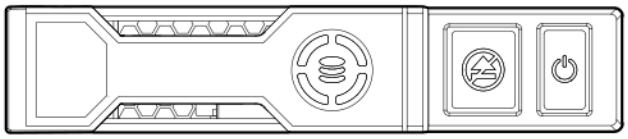

Description	Spare part number
375 GB, SSD, WI, SCN, DS	P02559-001
1.6 TB, SSD, MU, SCN, DS	P10470-001
1.92 TB, SSD, SCN, DS	P10466-001
3.2 TB, SSD, MU, SCN, DS	P10471-001
3.84 TB, SSD, RI, SCN, DS	P10467-001

Table Continued

Description	Spare part number
6.4 TB, SSD, MU, SCN, DS	P10472-001
7.68 TB, SSD, RI, SCN, DS	P10468-001

Drive backplane spare parts

Customer self repair: **mandatory**

Description	Spare part number
SAS/SATA drive backplane	877970-001
NVMe drive backplane	877974-001

HPE SFF Flash Adapter with dual micro form factor (uFF) SSDs spare parts

Customer self repair: **mandatory**

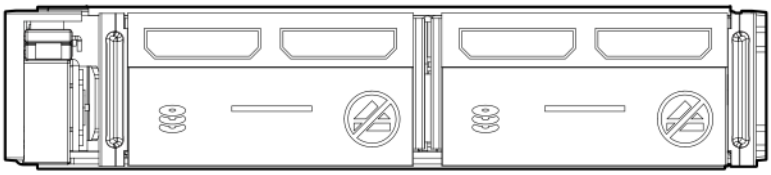

Description	Spare part number
SFF Flash Adapter	830452-001
120 GB, SATA, SSD, 6G, uFF	831995-001
340 GB, SATA, SSD, 6G, uFF	830453-001

M.2 enablement kit spare parts

Customer self repair: **optional**

Description	Spare part number
M.2 enablement kit	877976-001

M.2 SSD spare parts

Customer self repair: **mandatory**

Description	Spare part number
240 GB SATA M.2 SSD, 2280	875850-001
240 GB, SSD, SATA, M.2 MU, SCM, DS	P07721-001
480 GB, SSD, SATA, M.2 MU, DS	P07437-001
480 GB SATA M.2 SSD, 2280	875851-001

Table Continued

Description	Spare part number
480 GB SATA M.2 SSD, 2280	875855-001
960 GB SATA M.2 SSD, 2280	875852-001
960 GB SATA M.2 SSD, 2280	875856-001
HPE BL460c Gen10 M.2 module, PCA	877976-001

Mezzanine card option spare parts

Customer self repair: **mandatory**

Description	Spare part number
HPE FlexFabric 20Gb 2-port 630M Adapter	701528-001
HPE FlexFabric 20Gb 2-port 650M Adapter	701535-001
HPE Ethernet 10Gb 2-port 560M Adapter	669282-001
HPE InfiniBand FDR/Ethernet 40Gb two-port 544+M Adapter	764735-001
HPE LPe1605 16Gb Fibre Channel HBA for BladeSystem c-Class	718577-001
HPE QMH2672 16Gb Fibre Channel Host Bus Adapter	711305-001
HPE Smart Array P408e-m Mezz SR Gen10 Controller	836264-001
Ethernet 10Gb 2P 534M Adapter	701530-001

HPE Smart Storage Battery spare parts

Customer self repair: **optional**

Description	Spare part number
HPE Z BLc Smart Storage Battery	878640-001

Trusted Platform Module spare parts

Customer self repair: **optional**

Description	Spare part number
HPE TPM 2.0	872159-001

Customer self repair

Hewlett Packard Enterprise products are designed with many Customer Self Repair (CSR) parts to minimize repair time and allow for greater flexibility in performing defective parts replacement. If during the diagnosis period Hewlett Packard Enterprise (or Hewlett Packard Enterprise service providers or service partners) identifies that the repair can be accomplished by the use of a CSR part, Hewlett Packard Enterprise will ship that part directly to you for replacement. There are two categories of CSR parts:

- **Mandatory**—Parts for which customer self repair is mandatory. If you request Hewlett Packard Enterprise to replace these parts, you will be charged for the travel and labor costs of this service.
- **Optional**—Parts for which customer self repair is optional. These parts are also designed for customer self repair. If, however, you require that Hewlett Packard Enterprise replace them for you, there may or may not be additional charges, depending on the type of warranty service designated for your product.

NOTE: Some Hewlett Packard Enterprise parts are not designed for customer self repair. In order to satisfy the customer warranty, Hewlett Packard Enterprise requires that an authorized service provider replace the part. These parts are identified as "No" in the Illustrated Parts Catalog.

Based on availability and where geography permits, CSR parts will be shipped for next business day delivery. Same day or four-hour delivery may be offered at an additional charge where geography permits. If assistance is required, you can call the Hewlett Packard Enterprise Support Center and a technician will help you over the telephone. Hewlett Packard Enterprise specifies in the materials shipped with a replacement CSR part whether a defective part must be returned to Hewlett Packard Enterprise. In cases where it is required to return the defective part to Hewlett Packard Enterprise, you must ship the defective part back to Hewlett Packard Enterprise within a defined period of time, normally five (5) business days. The defective part must be returned with the associated documentation in the provided shipping material. Failure to return the defective part may result in Hewlett Packard Enterprise billing you for the replacement. With a customer self repair, Hewlett Packard Enterprise will pay all shipping and part return costs and determine the courier/carrier to be used.

For more information about the Hewlett Packard Enterprise CSR program, contact your local service provider.

Parts only warranty service

Your Hewlett Packard Enterprise Limited Warranty may include a parts only warranty service. Under the terms of parts only warranty service, Hewlett Packard Enterprise will provide replacement parts free of charge.

For parts only warranty service, CSR part replacement is mandatory. If you request Hewlett Packard Enterprise to replace these parts, you will be charged for the travel and labor costs of this service.

Réparation par le client (CSR)

Les produits Hewlett Packard Enterprise comportent de nombreuses pièces CSR (Customer Self Repair = réparation par le client) afin de minimiser les délais de réparation et faciliter le remplacement des pièces défectueuses. Si pendant la période de diagnostic, Hewlett Packard Enterprise (ou ses partenaires ou mainteneurs agréés) détermine que la réparation peut être effectuée à l'aide d'une pièce CSR, Hewlett Packard Enterprise vous l'envoie directement. Il existe deux catégories de pièces CSR :

- **Obligatoire—**Pièces pour lesquelles la réparation par le client est obligatoire. Si vous demandez à Hewlett Packard Enterprise de remplacer ces pièces, les coûts de déplacement et main d'œuvre du service vous seront facturés.
- **Facultatif—**Pièces pour lesquelles la réparation par le client est facultative. Ces pièces sont également conçues pour permettre au client d'effectuer lui-même la réparation. Toutefois, si vous demandez à Hewlett Packard Enterprise de remplacer ces pièces, l'intervention peut ou non vous être facturée, selon le type de garantie applicable à votre produit.

REMARQUE: Certaines pièces Hewlett Packard Enterprise ne sont pas conçues pour permettre au client d'effectuer lui-même la réparation. Pour que la garantie puisse s'appliquer, Hewlett Packard Enterprise exige que le remplacement de la pièce soit effectué par un Mainteneur Agréé. Ces pièces sont identifiées par la mention "Non" dans le Catalogue illustré.

Les pièces CSR sont livrées le jour ouvré suivant, dans la limite des stocks disponibles et selon votre situation géographique. Si votre situation géographique le permet et que vous demandez une livraison le jour même ou dans les 4 heures, celle-ci vous sera facturée. Pour toute assistance, appelez le Centre d'assistance Hewlett Packard Enterprise pour qu'un technicien vous aide au téléphone Dans les documents envoyés avec la pièce de rechange CSR, Hewlett Packard Enterprise précise s'il est nécessaire de lui retourner la pièce défectueuse. Si c'est le cas, vous devez le faire dans le délai indiqué, généralement cinq (5) jours ouvrés. La pièce et sa documentation doivent être retournées dans l'emballage fourni. Si vous ne retournez pas la pièce défectueuse, Hewlett Packard Enterprise se réserve le droit de vous facturer les coûts de remplacement. Dans le cas d'une pièce CSR, Hewlett Packard Enterprise supporte l'ensemble des frais d'expédition et de retour, et détermine la société de courses ou le transporteur à utiliser.

Pour plus d'informations sur le programme CSR de Hewlett Packard Enterprise, contactez votre Mainteneur Agrée local.

Service de garantie "pièces seules"

Votre garantie limitée Hewlett Packard Enterprise peut inclure un service de garantie "pièces seules". Dans ce cas, les pièces de rechange fournies par Hewlett Packard Enterprise ne sont pas facturées.

Dans le cadre de ce service, la réparation des pièces CSR par le client est obligatoire. Si vous demandez à Hewlett Packard Enterprise de remplacer ces pièces, les coûts de déplacement et main d'œuvre du service vous seront facturés.

Riparazione da parte del cliente

Per abbreviare i tempi di riparazione e garantire una maggiore flessibilità nella sostituzione di parti difettose, i prodotti Hewlett Packard Enterprise sono realizzati con numerosi componenti che possono essere riparati direttamente dal cliente (CSR, Customer Self Repair). Se in fase di diagnostica Hewlett Packard Enterprise (o un centro di servizi o di assistenza Hewlett Packard Enterprise) identifica il guasto come riparabile mediante un ricambio CSR, Hewlett Packard Enterprise lo spedirà direttamente al cliente per la sostituzione. Vi sono due categorie di parti CSR:

- **Obbligatorie—**Parti che devono essere necessariamente riparate dal cliente. Se il cliente ne affida la riparazione ad Hewlett Packard Enterprise, deve sostenere le spese di spedizione e di manodopera per il servizio.
- **Opzionali—**Parti la cui riparazione da parte del cliente è facoltativa. Si tratta comunque di componenti progettati per questo scopo. Se tuttavia il cliente ne richiede la sostituzione ad Hewlett Packard Enterprise, potrebbe dover sostenere spese addizionali a seconda del tipo di garanzia previsto per il prodotto.

NOTA: alcuni componenti Hewlett Packard Enterprise non sono progettati per la riparazione da parte del cliente. Per rispettare la garanzia, Hewlett Packard Enterprise richiede che queste parti siano sostituite da un centro di assistenza autorizzato. Tali parti sono identificate da un "No" nel Catalogo illustrato dei componenti.

In base alla disponibilità e alla località geografica, le parti CSR vengono spedite con consegna entro il giorno lavorativo seguente. La consegna nel giorno stesso o entro quattro ore è offerta con un supplemento di costo solo in alcune zone. In caso di necessità si può richiedere l'assistenza telefonica di un addetto del centro di supporto tecnico Hewlett Packard Enterprise. Nel materiale fornito con una parte di ricambio CSR, Hewlett Packard Enterprise specifica se il cliente deve restituire dei component. Qualora sia richiesta la resa ad Hewlett Packard Enterprise del componente difettoso, lo si deve spedire ad Hewlett Packard Enterprise entro un determinato periodo di tempo, generalmente cinque (5) giorni lavorativi. Il componente difettoso deve essere restituito con la documentazione associata nell'imballo di spedizione fornito. La mancata restituzione del componente può comportare la fatturazione del ricambio da parte di Hewlett Packard Enterprise. Nel caso di riparazione da parte del cliente, Hewlett Packard Enterprise sostiene tutte le spese di spedizione e resa e sceglie il corriere/vettore da utilizzare.

Per ulteriori informazioni sul programma CSR di Hewlett Packard Enterprise, contattare il centro di assistenza di zona.

Servizio di garanzia per i soli componenti

La garanzia limitata Hewlett Packard Enterprise può includere un servizio di garanzia per i soli componenti. Nei termini di garanzia del servizio per i soli componenti, Hewlett Packard Enterprise fornirà gratuitamente le parti di ricambio.

Per il servizio di garanzia per i soli componenti è obbligatoria la formula CSR che prevede la riparazione da parte del cliente. Se il cliente invece richiede la sostituzione ad Hewlett Packard Enterprise dovrà sostenere le spese di spedizione e di manodopera per il servizio.

Customer Self Repair

Hewlett Packard Enterprise Produkte enthalten viele CSR-Teile (Customer Self Repair), um Reparaturzeiten zu minimieren und höhere Flexibilität beim Austausch defekter Bauteile zu ermöglichen. Wenn Hewlett Packard Enterprise (oder ein Hewlett Packard Enterprise Servicepartner) bei der Diagnose feststellt, dass das Produkt mithilfe eines CSR-Teils repariert werden kann, sendet Ihnen Hewlett Packard Enterprise dieses Bauteil zum Austausch direkt zu. CSR-Teile werden in zwei Kategorien unterteilt:

- **Zwingend**—Teile, für die das Customer Self Repair-Verfahren zwingend vorgegeben ist. Wenn Sie den Austausch dieser Teile von Hewlett Packard Enterprise vornehmen lassen, werden Ihnen die Anfahrt- und Arbeitskosten für diesen Service berechnet.
- **Optional**—Teile, für die das Customer Self Repair-Verfahren optional ist. Diese Teile sind auch für Customer Self Repair ausgelegt. Wenn Sie jedoch den Austausch dieser Teile von Hewlett Packard Enterprise vornehmen lassen möchten, können bei diesem Service je nach den für Ihr Produkt vorgesehenen Garantiebedingungen zusätzliche Kosten anfallen.

HINWEIS: Einige Hewlett Packard Enterprise Teile sind nicht für Customer Self Repair ausgelegt. Um den Garantieanspruch des Kunden zu erfüllen, muss das Teil von einem Hewlett Packard Enterprise Servicepartner ersetzt werden. Im illustrierten Teilekatalog sind diese Teile mit „No“ bzw. „Nein“ gekennzeichnet.

CSR-Teile werden abhängig von der Verfügbarkeit und vom Lieferziel am folgenden Geschäftstag geliefert. Für bestimmte Standorte ist eine Lieferung am selben Tag oder innerhalb von vier Stunden gegen einen Aufpreis verfügbar. Wenn Sie Hilfe benötigen, können Sie das Hewlett Packard Enterprise Support Center anrufen und sich von einem Mitarbeiter per Telefon helfen lassen. Den Materialien von Hewlett Packard Enterprise, die mit einem CSR-Ersatzteil geliefert werden, können Sie entnehmen, ob das defekte Teil an Hewlett Packard Enterprise zurückgeschickt werden muss. Wenn es erforderlich ist, das defekte Teil an Hewlett Packard Enterprise zurückzuschicken, müssen Sie dies innerhalb eines vorgegebenen Zeitraums tun, in der Regel innerhalb von fünf (5) Geschäftstagen. Das defekte Teil muss mit der zugehörigen Dokumentation in der Verpackung zurückgeschickt werden, die im Lieferumfang enthalten ist. Wenn Sie das defekte Teil nicht zurückschicken, kann Hewlett Packard Enterprise Ihnen das Ersatzteil in Rechnung stellen. Im Falle von Customer Self Repair kommt Hewlett Packard Enterprise für alle Kosten für die Lieferung und Rücksendung auf und bestimmt den Kurier-/Frachtdienst.

Weitere Informationen über das Hewlett Packard Enterprise Customer Self Repair Programm erhalten Sie von Ihrem Servicepartner vor Ort.

Parts-only Warranty Service (Garantieservice ausschließlich für Teile)

Ihre Hewlett Packard Enterprise Garantie umfasst möglicherweise einen Parts-only Warranty Service (Garantieservice ausschließlich für Teile). Gemäß den Bestimmungen des Parts-only Warranty Service stellt Hewlett Packard Enterprise Ersatzteile kostenlos zur Verfügung.

Für den Parts-only Warranty Service ist das CSR-Verfahren zwingend vorgegeben. Wenn Sie den Austausch dieser Teile von Hewlett Packard Enterprise vornehmen lassen, werden Ihnen die Anfahrt- und Arbeitskosten für diesen Service berechnet.

Reparaciones del propio cliente

Los productos de Hewlett Packard Enterprise incluyen muchos componentes que el propio usuario puede reemplazar (Customer Self Repair, CSR) para minimizar el tiempo de reparación y ofrecer una mayor flexibilidad a la hora de realizar sustituciones de componentes defectuosos. Si, durante la fase de diagnóstico, Hewlett Packard Enterprise (o los proveedores o socios de servicio de Hewlett Packard Enterprise) identifica que una reparación puede llevarse a cabo mediante el uso de un componente CSR, Hewlett Packard Enterprise le enviará dicho componente directamente para que realice su sustitución. Los componentes CSR se clasifican en dos categorías:

- **Obligatorio**—Componentes cuya reparación por parte del usuario es obligatoria. Si solicita a Hewlett Packard Enterprise que realice la sustitución de estos componentes, tendrá que hacerse cargo de los gastos de desplazamiento y de mano de obra de dicho servicio.
- **Opcional**—Componentes cuya reparación por parte del usuario es opcional. Estos componentes también están diseñados para que puedan ser reparados por el usuario. Sin embargo, si precisa que Hewlett Packard Enterprise realice su sustitución, puede o no conllevar costes adicionales, dependiendo del tipo de servicio de garantía correspondiente al producto.

NOTA: Algunos componentes de Hewlett Packard Enterprise no están diseñados para que puedan ser reparados por el usuario. Para que el usuario haga valer su garantía, Hewlett Packard Enterprise pone como condición que un proveedor de servicios autorizado realice la sustitución de estos componentes. Dichos componentes se identifican con la palabra "No" en el catálogo ilustrado de componentes.

Según la disponibilidad y la situación geográfica, los componentes CSR se enviarán para que lleguen a su destino al siguiente día laborable. Si la situación geográfica lo permite, se puede solicitar la entrega en el mismo día o en cuatro horas con un coste adicional. Si precisa asistencia técnica, puede llamar al Centro de asistencia técnica de Hewlett Packard Enterprise y recibirá ayuda telefónica por parte de un técnico. Con el envío de materiales para la sustitución de componentes CSR, Hewlett Packard Enterprise especificará si los componentes defectuosos deberán devolverse a Hewlett Packard Enterprise. En aquellos casos en los que sea necesario devolver algún componente a Hewlett Packard Enterprise, deberá hacerlo en el periodo de tiempo especificado, normalmente cinco días laborables. Los componentes defectuosos deberán devolverse con toda la documentación relacionada y con el embalaje de envío. Si no enviara el componente defectuoso requerido, Hewlett Packard Enterprise podrá cobrarle por el de sustitución. En el caso de todas sustituciones que lleve a cabo el cliente, Hewlett Packard Enterprise se hará cargo de todos los gastos de envío y devolución de componentes y escogerá la empresa de transporte que se utilice para dicho servicio.

Para obtener más información acerca del programa de Reparaciones del propio cliente de Hewlett Packard Enterprise, póngase en contacto con su proveedor de servicios local.

Servicio de garantía exclusivo de componentes

La garantía limitada de Hewlett Packard Enterprise puede que incluya un servicio de garantía exclusivo de componentes. Según las condiciones de este servicio exclusivo de componentes, Hewlett Packard Enterprise le facilitará los componentes de repuesto sin cargo adicional alguno.

Para este servicio de garantía exclusivo de componentes, es obligatoria la sustitución de componentes por parte del usuario (CSR). Si solicita a Hewlett Packard Enterprise que realice la sustitución de estos componentes, tendrá que hacerse cargo de los gastos de desplazamiento y de mano de obra de dicho servicio.

Customer Self Repair

Veel onderdelen in Hewlett Packard Enterprise producten zijn door de klant zelf te repareren, waardoor de reparatieduur tot een minimum beperkt kan blijven en de flexibiliteit in het vervangen van defecte onderdelen groter is. Deze onderdelen worden CSR-onderdelen (Customer Self Repair) genoemd. Als Hewlett Packard Enterprise (of een Hewlett Packard Enterprise Service Partner) bij de diagnose vaststelt dat de reparatie kan worden uitgevoerd met een CSR-onderdeel, verzendt Hewlett Packard Enterprise dat onderdeel rechtstreeks naar u, zodat u het defecte onderdeel daarmee kunt vervangen. Er zijn twee categorieën CSR-onderdelen:

- **Verplicht**—Onderdelen waarvoor reparatie door de klant verplicht is. Als u Hewlett Packard Enterprise verzoekt deze onderdelen voor u te vervangen, worden u voor deze service reiskosten en arbeidsloon in rekening gebracht.
- **Optioneel**—Onderdelen waarvoor reparatie door de klant optioneel is. Ook deze onderdelen zijn ontworpen voor reparatie door de klant. Als u echter Hewlett Packard Enterprise verzoekt deze onderdelen voor u te vervangen, kunnen daarvoor extra kosten in rekening worden gebracht, afhankelijk van het type garantieservice voor het product.

OPMERKING: Sommige Hewlett Packard Enterprise onderdelen zijn niet ontwikkeld voor reparatie door de klant. In verband met de garantievoorwaarden moet het onderdeel door een geautoriseerde Service Partner worden vervangen. Deze onderdelen worden in de geïllustreerde onderdelencatalogus aangemerkt met "Nee".

Afhankelijk van de leverbaarheid en de locatie worden CSR-onderdelen verzonden voor levering op de eerstvolgende werkdag. Levering op dezelfde dag of binnen vier uur kan tegen meerkosten worden aangeboden, indien dit mogelijk is gezien de locatie. Indien assistentie is gewenst, belt u het Hewlett Packard Enterprise Support Center om via de telefoon ondersteuning van een technicus te ontvangen. Hewlett Packard Enterprise vermeldt in de documentatie bij het vervangende CSR-onderdeel of het defecte onderdeel aan Hewlett Packard Enterprise moet worden geretourneerd. Als het defecte onderdeel aan Hewlett Packard Enterprise moet worden teruggezonden, moet u het defecte onderdeel binnen een bepaalde periode, gewoonlijk vijf (5) werkdagen, retourneren aan Hewlett Packard Enterprise. Het defecte onderdeel moet met de bijbehorende documentatie worden geretourneerd in het meegeleverde verpakkingsmateriaal. Als u het defecte onderdeel niet terugzendt, kan Hewlett Packard Enterprise u voor het vervangende onderdeel kosten in rekening brengen. Bij reparatie door de klant betaalt Hewlett Packard Enterprise alle verzendkosten voor het vervangende en geretourneerde onderdeel en kiest Hewlett Packard Enterprise zelf welke koerier/transportonderneming hiervoor wordt gebruikt.

Neem contact op met een Service Partner voor meer informatie over het Customer Self Repair programma van Hewlett Packard Enterprise.

Garantieservice "Parts Only"

Het is mogelijk dat de Hewlett Packard Enterprise garantie alleen de garantieservice "Parts Only" omvat. Volgens de bepalingen van de Parts Only garantieservice zal Hewlett Packard Enterprise kosteloos vervangende onderdelen ter beschikking stellen.

Voor de Parts Only garantieservice is vervanging door CSR-onderdelen verplicht. Als u Hewlett Packard Enterprise verzoekt deze onderdelen voor u te vervangen, worden u voor deze service reiskosten en arbeidsloon in rekening gebracht

Reparo feito pelo cliente

Os produtos da Hewlett Packard Enterprise são projetados com muitas peças para reparo feito pelo cliente (CSR) de modo a minimizar o tempo de reparo e permitir maior flexibilidade na substituição de peças com defeito. Se, durante o período de diagnóstico, a Hewlett Packard Enterprise (ou fornecedores/parceiros da Hewlett Packard Enterprise) concluir que o reparo pode ser efetuado pelo uso de uma peça CSR, a Hewlett Packard Enterprise enviará a peça diretamente ao cliente. Há duas categorias de peças CSR:

- **Obrigatória**—Peças cujo reparo feito pelo cliente é obrigatório. Se desejar que a Hewlett Packard Enterprise substitua essas peças, serão cobradas as despesas de transporte e mão-de-obra do serviço.
- **Opcional**—Peças cujo reparo feito pelo cliente é opcional. Essas peças também são projetadas para o reparo feito pelo cliente. No entanto, se desejar que a Hewlett Packard Enterprise as substitua, pode haver ou não a cobrança de taxa adicional, dependendo do tipo de serviço de garantia destinado ao produto.

OBSERVAÇÃO: Algumas peças da Hewlett Packard Enterprise não são projetadas para o reparo feito pelo cliente. A fim de cumprir a garantia do cliente, a Hewlett Packard Enterprise exige que um técnico autorizado substitua a peça. Essas peças estão identificadas com a marca "No" (Não), no catálogo de peças ilustrado.

Conforme a disponibilidade e o local geográfico, as peças CSR serão enviadas no primeiro dia útil após o pedido. Onde as condições geográficas permitirem, a entrega no mesmo dia ou em quatro horas pode ser feita mediante uma taxa adicional. Se precisar de auxílio, entre em contato com o Centro de suporte técnico da Hewlett Packard Enterprise para que um técnico o ajude por telefone. A Hewlett Packard Enterprise especifica nos materiais fornecidos com a peça CSR de reposição se a peça com defeito deve ser devolvida à Hewlett Packard Enterprise. Nos casos em que isso for necessário, é preciso enviar a peça com defeito à Hewlett Packard Enterprise, você deverá enviar a peça com defeito de volta para a Hewlett Packard Enterprise dentro do período de tempo definido, normalmente em 5 (cinco) dias úteis. A peça com defeito deve ser enviada com a documentação correspondente no material de transporte fornecido. Caso não o faça, a Hewlett Packard Enterprise poderá cobrar a reposição. Para as peças de reparo feito pelo cliente, a Hewlett Packard Enterprise paga todas as despesas de transporte e de devolução da peça e determina a transportadora/serviço postal a ser utilizado.

Para obter mais informações sobre o programa de reparo feito pelo cliente da Hewlett Packard Enterprise, entre em contato com o fornecedor de serviços local.

Serviço de garantia apenas para peças

A garantia limitada da Hewlett Packard Enterprise pode incluir um serviço de garantia apenas para peças. Segundo os termos do serviço de garantia apenas para peças, a Hewlett Packard Enterprise fornece as peças de reposição sem cobrar nenhuma taxa.

No caso desse serviço, a substituição de peças CSR é obrigatória. Se desejar que a Hewlett Packard Enterprise substitua essas peças, serão cobradas as despesas de transporte e mão-de-obra do serviço.

カスタマーセルフリペア

修理時間を短縮し、故障部品の交換における高い柔軟性を確保するために、Hewlett Packard Enterprise製品には多数のカスタマーセルフリペア（CSR）部品があります。診断の際に、CSR部品を使用すれば修理ができるとHewlett Packard Enterprise（Hewlett Packard EnterpriseまたはHewlett Packard Enterprise正規保守代理店）が判断した場合、Hewlett Packard Enterpriseはその部品を直接、お客様に発送し、お客様に交換していただきます。CSR部品には以下の2種類があります。

- **必須** - カスタマーセルフリペアが必須の部品。当該部品について、もしもお客様がHewlett Packard Enterpriseに交換作業を依頼される場合には、その修理サービスに関する交通費および人件費がお客様に請求されます。
- **任意** - カスタマーセルフリペアが任意である部品。この部品もカスタマーセルフリペア用です。当該部品について、もしもお客様がHewlett Packard Enterpriseに交換作業を依頼される場合には、お買い上げの製品に適用される保証サービス内容の範囲内においては、別途費用を負担していただくことなく保証サービスを受けることができます。

注：Hewlett Packard Enterprise製品の一部の部品は、カスタマーセルフリペアの対象外です。製品の保証を継続するためには、Hewlett Packard EnterpriseまたはHewlett Packard Enterprise正規保守代理店による交換作業が必須となります。部品カタログには、当該部品がカスタマーセルフリペア除外品である旨が記載されています。

部品供給が可能な場合、地域によっては、CSR部品を翌営業日に届くように発送します。また、地域によっては、追加費用を負担いただくことにより同日または4時間以内に届くように発送することも可能な場合があります。サポートが必要なときは、Hewlett Packard Enterpriseサポートセンターに電話していただければ、技術者が電話でアドバイスします。交換用のCSR部品または同梱物には、故障部品をHewlett Packard Enterpriseに返送する必要があるかどうかが表示されています。故障部品をHewlett Packard Enterpriseに返送する必要がある場合は、指定期限内（通常は5営業日以内）に故障部品をHewlett Packard Enterpriseに返送してください。故障部品を返送する場合は、届いた時の梱包箱に関連書類とともに入れてください。故障部品を返送しない場合、Hewlett Packard Enterpriseから部品費用が請求されます。カスタマーセルフリペアの際には、Hewlett Packard Enterpriseは送料および部品返送費を全額負担し、使用する宅配便会社や運送会社を指定します。

部品のみ保証サービス

Hewlett Packard Enterprise保証サービスには、部品のみ保証サービスが適用される場合があります。このサービスでは、交換部品は無償で提供されます。

部品のみ保証サービスにおいては、CSR部品をお客様により交換作業していただくことが必須になります。当該部品について、もしもお客様がHewlett Packard Enterpriseに交換作業を依頼される場合には、その修理サービスに関する交通費および人件費がお客様のご負担となります。

客户自行维修

Hewlett Packard Enterprise 产品提供许多客户自行维修 (CSR) 部件，以尽可能缩短维修时间和在更换缺陷部件方面提供更大的灵活性。如果在诊断期间 Hewlett Packard Enterprise（或Hewlett Packard Enterprise 服务提供商或服务合作伙伴）确定可以通过使用 CSR 部件完成维修，Hewlett Packard Enterprise 将直接把该部件发送给您进行更换。有两类 CSR 部件：

- **强制性的** — 要求客户必须自行维修的部件。如果您请求 Hewlett Packard Enterprise 更换这些部件，则必须为该服务支付差旅费和人工费用。
- **可选的** — 客户可以选择是否自行维修的部件。这些部件也是为客户自行维修设计的。不过，如果您要求 Hewlett Packard Enterprise 为您更换这些部件，则根据为您的产品指定的保修服务类型，Hewlett Packard Enterprise 可能收取或不再收取任何附加费用。

注：某些 Hewlett Packard Enterprise 部件的设计并未考虑客户自行维修。为了满足客户保修的需要，Hewlett Packard Enterprise 要求授权服务提供商更换相关部件。这些部件在部件图解目录中标记为“否”。

CSR 部件将在下一个工作日发运（取决于备货情况和允许的地理范围）。在允许的地理范围内，可在当天或四小时内发运，但要收取额外费用。如果需要帮助，您可以致电 Hewlett Packard Enterprise 技术支持中心，将会有技术人员通过电话为您提供帮助。Hewlett Packard Enterprise 会在随更换的 CSR 部件发运的材料中指明是否必须将有缺陷的部件返还给 Hewlett Packard Enterprise。如果要求您将有缺陷的部件返还给 Hewlett Packard Enterprise，那么您必须在规定的期限内（通常是五 (5) 个工作日）将缺陷部件发给 Hewlett Packard Enterprise。有缺陷的部件必须随所提供的发运材料中的相关文件一起返还。如果未能送还有缺陷的部件，Hewlett Packard Enterprise 可能会要求您支付更换费用。客户自行维修时，Hewlett Packard Enterprise 将承担所有相关运输和部件返回费用，并指定快递商/承运商。

有关 Hewlett Packard Enterprise 客户自行维修计划的详细信息，请与您当地的服务提供商联系。

仅部件保修服务

您的 Hewlett Packard Enterprise 有限保修服务可能涉及仅部件保修服务。根据仅部件保修服务条款的规定，Hewlett Packard Enterprise 将免费提供更换的部件。

仅部件保修服务要求进行 CSR 部件更换。如果您请求 Hewlett Packard Enterprise 更换这些部件，则必须为该服务支付差旅费和人工费用。

客戶自行維修

Hewlett Packard Enterprise 產品設計了許多「客戶自行維修」(CSR) 的零件以減少維修時間，並且使得更換瑕疵零件時能有更大的彈性。如果在診斷期間，Hewlett Packard Enterprise (或 Hewlett Packard Enterprise 服務供應商或維修夥伴) 辨認出此項維修工作可以藉由使用 CSR 零件來完成，則 Hewlett Packard Enterprise 將直接寄送該零件給您作更換。CSR 零件分為兩種類別：

- **強制的** — 客戶自行維修所使用的零件是強制性的。如果您要求 Hewlett Packard Enterprise 更換這些零件，Hewlett Packard Enterprise 將會向您收取此服務所需的外出費用與勞動成本。
- **選購的** — 客戶自行維修所使用的零件是選購的。這些零件也設計用於客戶自行維修之用。不過，如果您要求 Hewlett Packard Enterprise 為您更換，則可能需要也可能不需要負擔額外的費用，端視針對此產品指定的保固服務類型而定。

備註：某些 Hewlett Packard Enterprise 零件沒有消費者可自行維修的設計。為符合客戶保固，Hewlett Packard Enterprise 需要授權的服務供應商更換零件。這些零件在圖示的零件目錄中，被標示為「否」。

基於材料取得及環境允許的情況下，CSR 零件將於下一個工作日以快遞寄送。在環境的允許下當天或四小時內送達，則可能需要額外的費用。若您需要協助，可致電 Hewlett Packard Enterprise 支援中心，會有一位技術人員透過電話來協助您。不論損壞的零件是否必須退回，Hewlett Packard Enterprise 皆會在與 CSR 替換零件一起運送的材料中註明。若要將損壞的零件退回 Hewlett Packard Enterprise，您必須在指定的一段時間內 (通常為五 (5) 個工作天)，將損壞的零件寄回 Hewlett Packard Enterprise。損壞的零件必須與寄送資料中隨附的相關技術文件一併退還。如果無法退還損壞的零件，Hewlett Packard Enterprise 可能要向您收取替換費用。針對客戶自行維修情形，Hewlett Packard Enterprise 將負責所有運費及零件退還費用，並指定使用何家快遞/貨運公司。

如需 Hewlett Packard Enterprise 的 CSR 方案詳細資訊，請連絡您當地的服務供應商。

僅限零件的保固服務

您的「Hewlett Packard Enterprise 有限保固」可能包含僅限零件的保固服務。在僅限零件的保固服務情況下，Hewlett Packard Enterprise 將免費提供替換零件。

針對僅限零件的保固服務，CSR 零件替換是強制性的。如果您要求 Hewlett Packard Enterprise 更換這些零件，Hewlett Packard Enterprise 將會向您收取此服務所需的外出費用與勞動成本。

고객 셀프 수리

Hewlett Packard Enterprise 제품은 수리 시간을 최소화하고 결함이 있는 부품 교체 시 더욱 융통성을 발휘할 수 있도록 하기 위해 고객 셀프 수리(CSR) 부품을 다량 사용하여 설계되었습니다. 진단 기간 동안 Hewlett Packard Enterprise(또는 Hewlett Packard Enterprise 서비스 공급업체 또는 서비스 협력업체)에서 CSR 부품을 사용하여 수리가 가능하다고 판단되면 Hewlett Packard Enterprise는 해당 부품을 바로 사용자에게 보내어 사용자가 교체할 수 있도록 합니다. CSR 부품에는 두 가지 종류가 있습니다.

- **필수 -** 고객 셀프 수리가 의무 사항인 필수 부품. 사용자가 Hewlett Packard Enterprise에 이 부품의 교체를 요청할 경우 이 서비스에 대한 출장비 및 작업비가 청구됩니다.
- **선택 사항 -** 고객 셀프 수리가 선택 사항인 부품. 이 부품들도 고객 셀프 수리가 가능하도록 설계되었습니다. 하지만 사용자가 Hewlett Packard Enterprise에 이 부품의 교체를 요청할 경우 사용자가 구입한 제품에 해당하는 보증 서비스 유형에 따라 추가 비용 없이 교체가 가능할 수 있습니다.

참고: 일부 Hewlett Packard Enterprise 부품은 고객 셀프 수리가 불가능하도록 설계되었습니다. Hewlett Packard Enterprise는 만족스러운 고객 보증을 위해 공인 서비스 제공업체를 통해 부품을 교체하도록 하고 있습니다. 이러한 부품들은 Illustrated Parts Catalog에 "No"라고 표시되어 있습니다.

CSR 부품은 재고 상태와 지리적 조건이 허용하는 경우 다음 영업일 납품이 가능하도록 배송이 이루어집니다. 지리적 조건이 허용하는 경우 추가 비용이 청구되는 조건으로 당일 또는 4시간 배송이 가능할 수도 있습니다. 도움이 필요하시면 Hewlett Packard Enterprise Support Center로 전화하십시오. 전문 기술자가 전화로 도움을 줄 것입니다. Hewlett Packard Enterprise는 결함이 발생한 부품을 Hewlett Packard Enterprise로 반환해야 하는지 여부를 CSR 교체 부품과 함께 배송된 자료에 지정합니다. 결함이 발생한 부품을 Hewlett Packard Enterprise로 반환해야 하는 경우에는 지정된 기간 내(통상 영업일 기준 5일)에 Hewlett Packard Enterprise로 반환해야 합니다. 이때 결함이 발생한 부품은 제공된 포장 재료에 넣어 관련 설명서와 함께 반환해야 합니다. 결함이 발생한 부품을 반환하지 않는 경우 Hewlett Packard Enterprise가 교체 부품에 대해 비용을 청구할 수 있습니다. 고객 셀프 수리의 경우, Hewlett Packard Enterprise는 모든 운송 및 부품 반환 비용을 부담하며 이용할 운송업체 및 택배 서비스를 결정합니다.

Hewlett Packard Enterprise CSR 프로그램에 대한 자세한 내용은 가까운 서비스 제공업체에 문의하십시오.

부품 제공 보증 서비스

Hewlett Packard Enterprise 제한 보증에는 부품 제공 보증 서비스가 포함될 수 있습니다. 이러한 경우 Hewlett Packard Enterprise는 부품 제공 보증 서비스의 조건에 따라 교체 부품만을 무료로 제공합니다.

부품 제공 보증 서비스 제공 시 CSR 부품 교체는 의무 사항입니다. 사용자가 Hewlett Packard Enterprise에 이 부품의 교체를 요청할 경우 이 서비스에 대한 출장비 및 작업비가 청구됩니다.

Removal and replacement procedures

Required tools

The following tools might be required to perform some procedures:

- T-15 Torx screwdriver
- No. 1 Phillips screwdriver

Safety considerations

Before performing service procedures, review all the safety information.

Preventing electrostatic discharge

To prevent damaging the system, be aware of the precautions you must follow when setting up the system or handling parts. A discharge of static electricity from a finger or other conductor may damage system boards or other static-sensitive devices. This type of damage may reduce the life expectancy of the device.

Procedure

- Avoid hand contact by transporting and storing products in static-safe containers.
- Keep electrostatic-sensitive parts in their containers until they arrive at static-free workstations.
- Place parts on a grounded surface before removing them from their containers.
- Avoid touching pins, leads, or circuitry.
- Always be properly grounded when touching a static-sensitive component or assembly.

Server blade warnings and cautions

WARNING: To reduce the risk of shock or injury from high-current electrical energy, do not remove the server blade access panel and then install the server blade into the enclosure.

WARNING: To reduce the risk of personal injury from hot surfaces, allow the drives and the internal system components to cool before touching them.

CAUTION: Do not operate the server blade with the access panel removed. Operating the server blade in this manner results in improper airflow and improper cooling that can lead to thermal damage.

CAUTION: When performing non-hot-plug operations, you must power down the server blade and/or the system. However, it might be necessary to leave the server blade powered up when performing other operations, such as hot-plug installations or troubleshooting.

WARNING: To reduce the risk of fire or burns after removing the energy pack:

- Do not disassemble, crush, or puncture the energy pack.
- Do not short external contacts.
- Do not dispose of the energy pack in fire or water.

After power is disconnected, battery voltage might still be present for 1s to 160s.

AVERTISSEMENT: Pour réduire les risques d'incendie ou de brûlures après le retrait du module batterie :

- N'essayez pas de démonter, d'écraser ou de percer le module batterie.
- Ne court-circuitez pas ses contacts externes.
- Ne jetez pas le module batterie dans le feu ou dans l'eau.

Après avoir déconnecté l'alimentation, une tension peut subsister dans la batterie durant 1 à 160 secondes.

Symbols on equipment

The following symbols might be found on the equipment to indicate the presence of potentially hazardous conditions.

	This symbol indicates the presence of hazardous energy circuits or electric shock hazards. Refer all servicing to qualified personnel. **WARNING:** To reduce the risk of injury from electric shock hazards, do not open this enclosure. Refer all maintenance, upgrades, and servicing to qualified personnel.
	This symbol indicates the presence of electric shock hazards. The area contains no user or field serviceable parts. Do not open for any reason. **WARNING:** To reduce the risk of injury from electric shock hazards, do not open this enclosure.
	This symbol on an RJ-45 receptacle indicates a network interface connection. **WARNING:** To reduce the risk of electric shock, fire, or damage to the equipment, do not plug telephone or telecommunications connectors into this receptacle.
	This symbol indicates the presence of a hot surface or hot component. If this surface is contacted, the potential for injury exists. **WARNING:** To reduce the risk of injury from a hot component, allow the surface to cool before touching.
 217.7 kg 480.0 lb	This symbol indicates that the component exceeds the recommended weight for one individual to handle safely. **WARNING:** To reduce the risk of personal injury or damage to the equipment, observe local occupational health and safety requirements and guidelines for manual material handling.

These symbols, on power supplies or systems, indicate that the equipment is supplied by multiple sources of power.

WARNING: To reduce the risk of injury from electric shock, remove all power cords to disconnect power from the system completely.

Server blade preparation

To service any internal server blade component, power down the server blade and remove it from the enclosure.

Power up the server blade

The OA initiates an automatic power-up sequence when the server blade is installed. If the default setting is changed, use one of the following methods to power up the server blade:

- Use a virtual power button selection through iLO.
- Press and release the Power On/Standby button.

When the server blade goes from the standby mode to the full power mode, the system power LED changes from amber to solid green. The health LED flashes green when the Power On/Standby Button service is being initialized. For more information about the system power LED status, see **Front panel LEDs and buttons**.

For more information about the OA, see the OA setup and installation guide on the **Hewlett Packard Enterprise website**.

Power down the server blade

Procedure

- Press and release the Power On/Standby button.

  This method initiates a controlled shutdown of applications and the OS before the server blade enters standby mode.
- Press and hold the Power On/Standby button for more than 4 seconds to force the server blade to enter standby mode.

  This method forces the server blade to enter standby mode without properly exiting applications and the OS. If an application stops responding, you can use this method to force a shutdown.
- Use a virtual power button selection through iLO.

  This method initiates a controlled remote shutdown of applications and the OS before the server blade enters standby mode.
- Use the OA CLI to execute one of the following commands:
  - `poweroff server [bay number]`

    This command initiates a controlled shutdown of applications and the OS before the server blade enters standby mode.
  - `poweroff server [bay number] force`

    This form of the command forces the server blade to enter standby mode without properly exiting applications and the OS. If an application stops responding, this method forces a shutdown.
- Use the OA GUI to initiate a shutdown:

1. Select the **Enclosure Information** tab.
2. In the Device Bays item, select the server.
3. From the Virtual Power menu, initiate a shutdown of applications and the OS:
   - For a controlled shutdown, select **Momentary Press**.
   - For an emergency shutdown, select **Press and Hold**.

Before proceeding, verify that the server blade is in standby mode by observing that the system power LED is amber.

Remove the server blade

CAUTION: To prevent improper cooling and thermal damage, do not operate the server blade enclosure unless all bays are populated with either a component or a blank.

Procedure

1. Identify the proper server blade.
2. **Power down the server blade**.
3. Remove the server blade.

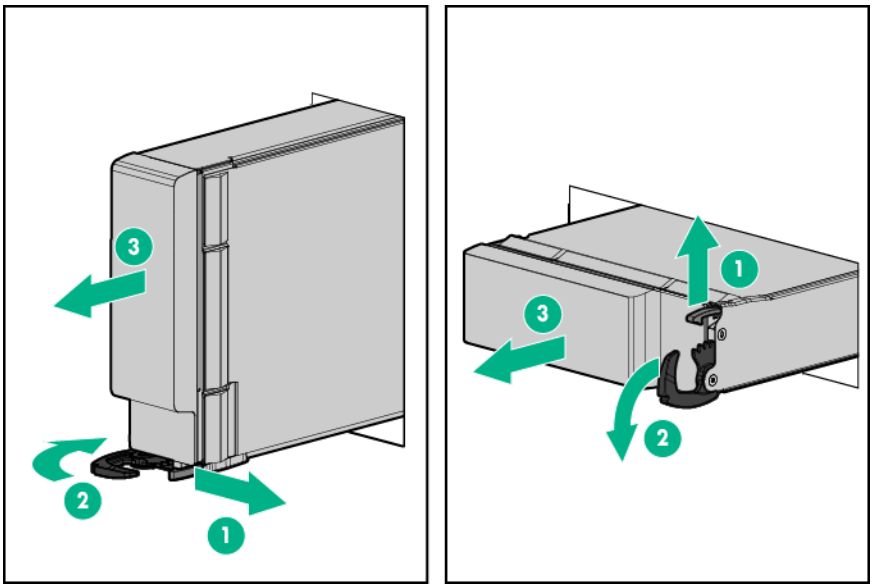

4. Place the server blade on a flat, level work surface.

WARNING: To reduce the risk of personal injury from hot surfaces, allow the drives and the internal system components to cool before touching them.

CAUTION: To prevent damage to electrical components, properly ground the server blade before beginning any installation procedure. Improper grounding can cause electrostatic discharge.

Install the server blade

CAUTION: To prevent improper cooling and thermal damage, do not operate the server blade or the enclosure unless all device bays are populated with either a component or a blank.

CAUTION: Failure to install the divider in a quadrant when installing half-height blades can result in damage to the connectors on the server blade.

For the best possible BladeSystem and Virtual Connect experience, and to prevent a future reboot, Hewlett Packard Enterprise requires updating the Onboard Administrator and Virtual Connect to the correct version before installing an HPE ProLiant Gen10 server blade. The version information is on the tag on the front of the server blade.

For more information on this and other specific firmware and driver requirements, as well as the latest firmware and driver versions, download the latest SPP from the Hewlett Packard Enterprise website (**http://www.hpe.com/servers/spp/download**).

Procedure

1. Remove the device bay blank.

   Retain the blank for future use.

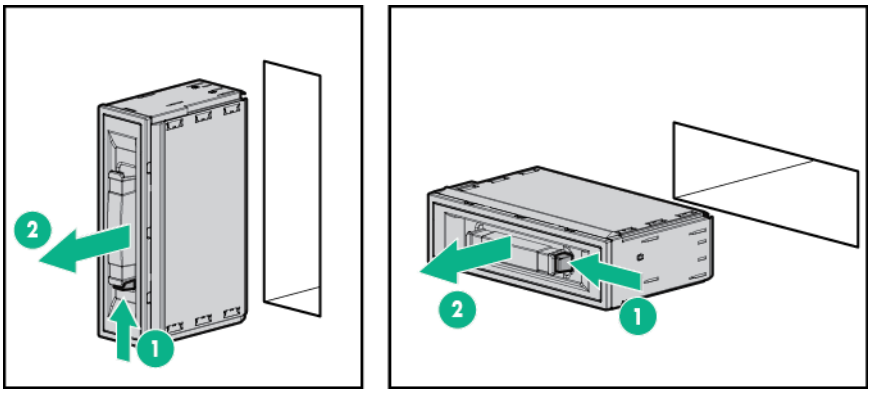

2. Remove the enclosure connector cover.

   Retain the cover for future use.

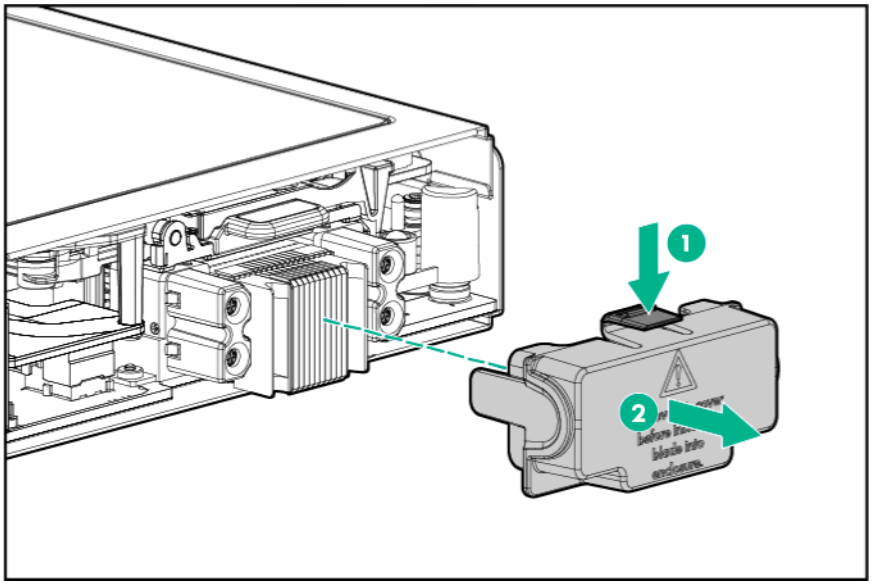

3. Install the server blade.

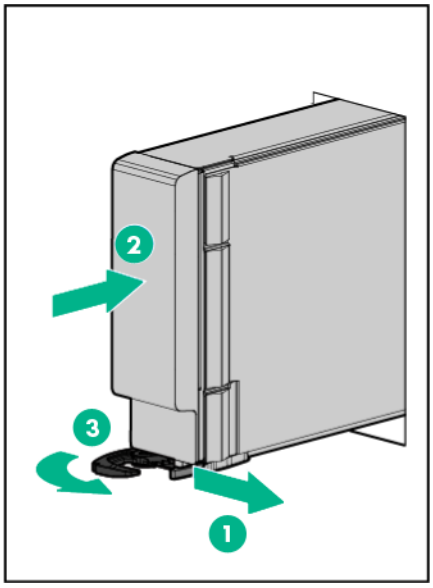

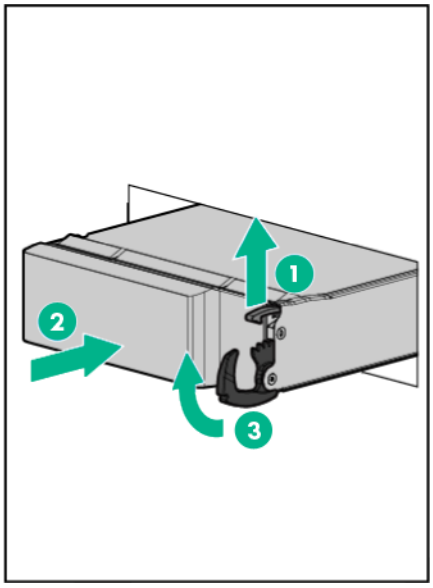

Remove the enclosure connector cover

Procedure

1. Place the server blade on a flat, level work surface.
2. Remove the enclosure connector cover.

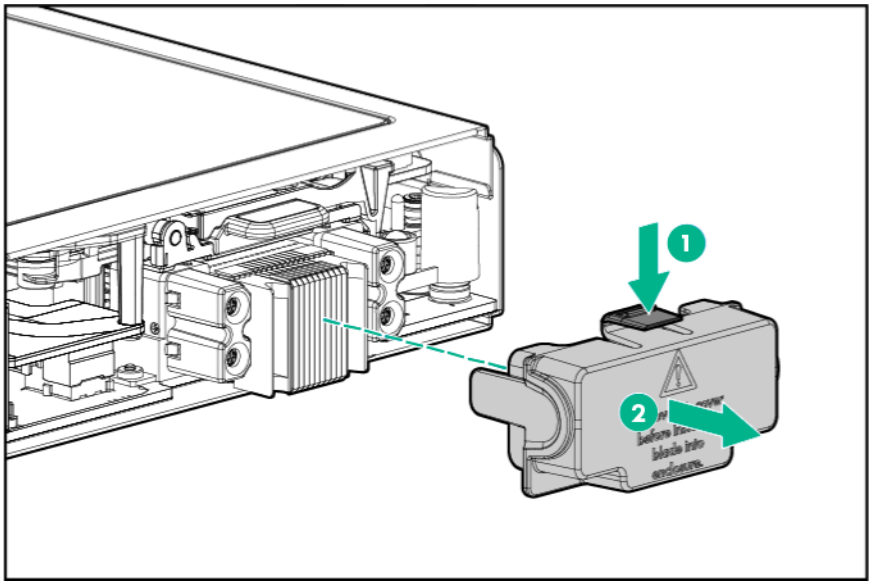

Relocate the PEM nut and rubber stopper

This procedure is required if the PEM nut and rubber stoppers must be relocated to support the length of the M.2 SSDs being installed.

Prerequisites

To remove the M.2 SSDs from the M.2 riser, you need a No. 1 Phillips screwdriver.

Procedure

1. **Power down the server blade**.
2. **Remove the server blade**.
3. Place the server blade on a flat, level work surface.
4. Remove the access panel (**Removing the access panel**).
5. Remove the left DIMM baffle (**Removing the DIMM baffles**).
6. **Remove the M.2 interposer board and the M.2 riser board**.
7. If installed, remove an M.2 SSD from the M.2 riser board (**Removing and replacing an M.2 SSD**).
8. Remove the rubber stoppers from the M.2 riser.

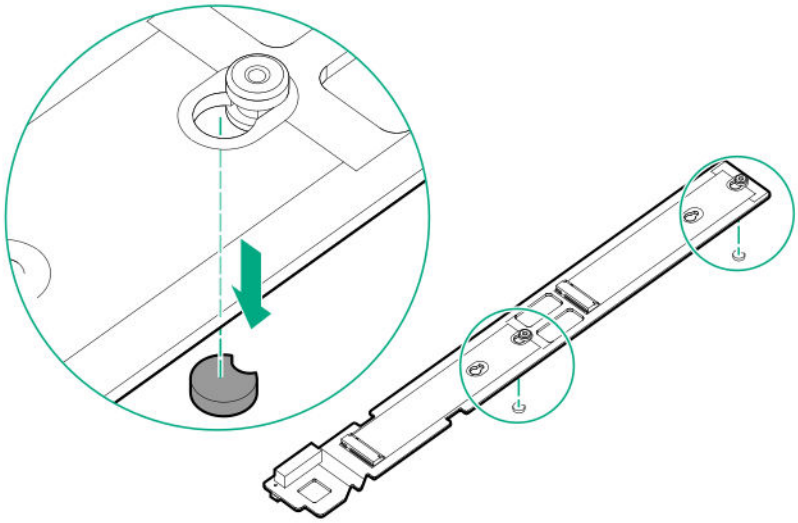

9. Remove the PEM nuts from the M.2 riser.

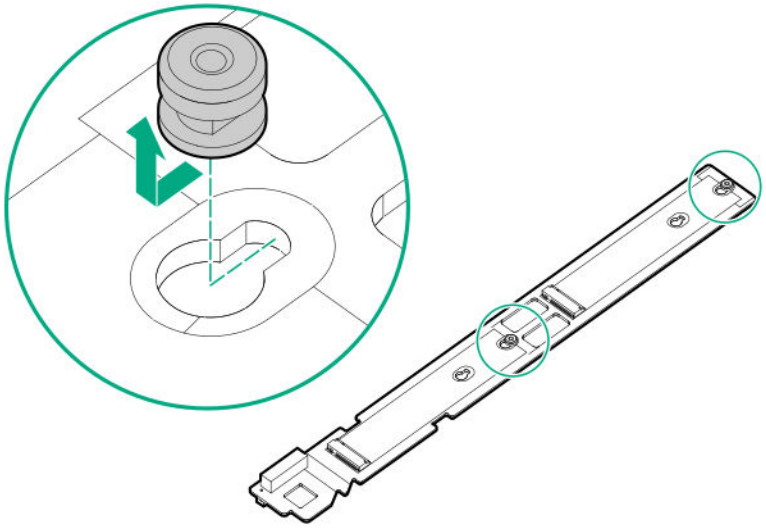

10. Install the PEM nuts in the new location on the M.2 riser.

CAUTION: Always install the PEM nut with the thicker edge on top of the M.2 riser and the thinner edge on the bottom of the M.2 riser. Failure to install the PEM nut in the proper orientation can cause damage to the components.

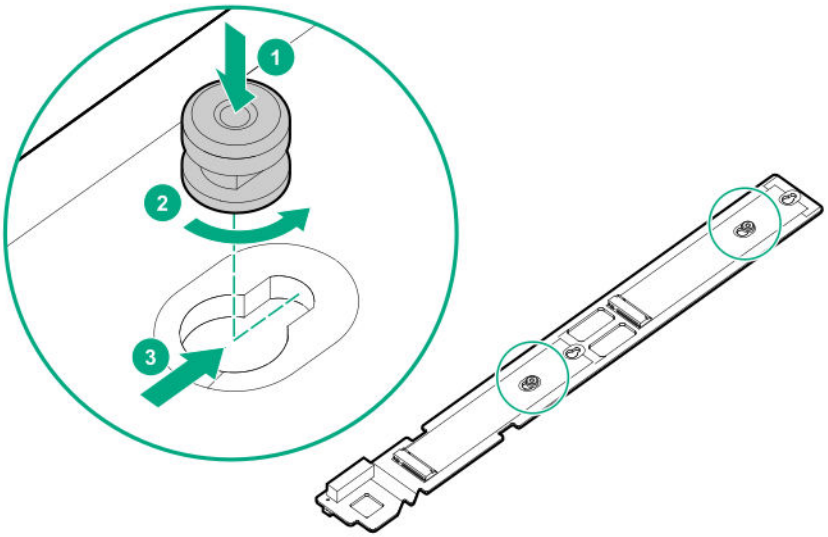

11. Install the rubber stoppers in the new locations to secure the PEM nuts in the M.2 riser.

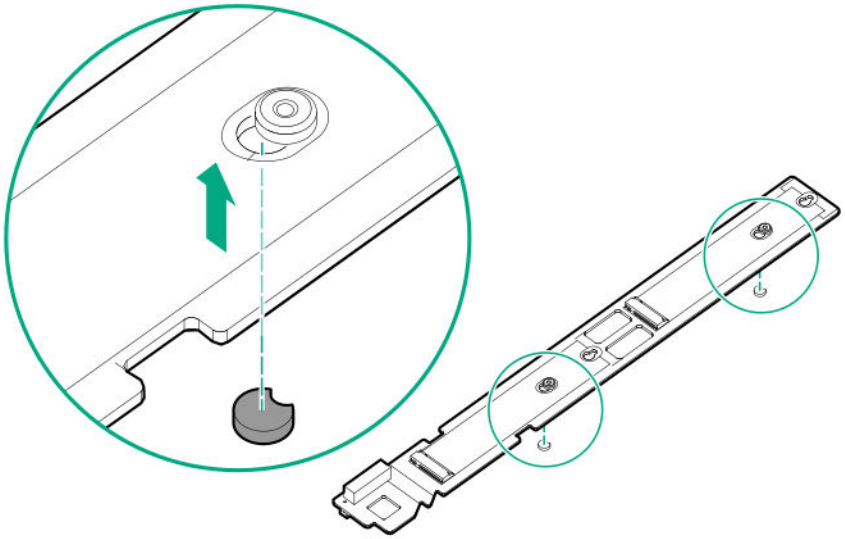

12. Install the M.2 SSDs on the M.2 riser board.
13. Install the M.2 riser board and the M.2 interposer board on the left DIMM baffle (**Installing the M.2 riser board and M.2 interposer board**).
14. Install the left DIMM baffle (**Replacing the DIMM baffles**).
15. Install the access panel (**Replacing the access panel**).
16. **Install the server blade**.
17. **Power up the server blade**.

Remove the M.2 interposer board and the M.2 riser board

Procedure

1. **Power down the server blade**.
2. **Remove the server blade**.
3. Place the server blade on a flat, level work surface.
4. Remove the access panel (**Removing the access panel**).
5. Remove the left DIMM baffle (**Removing the DIMM baffles**).
6. Remove the M.2 interposer board.

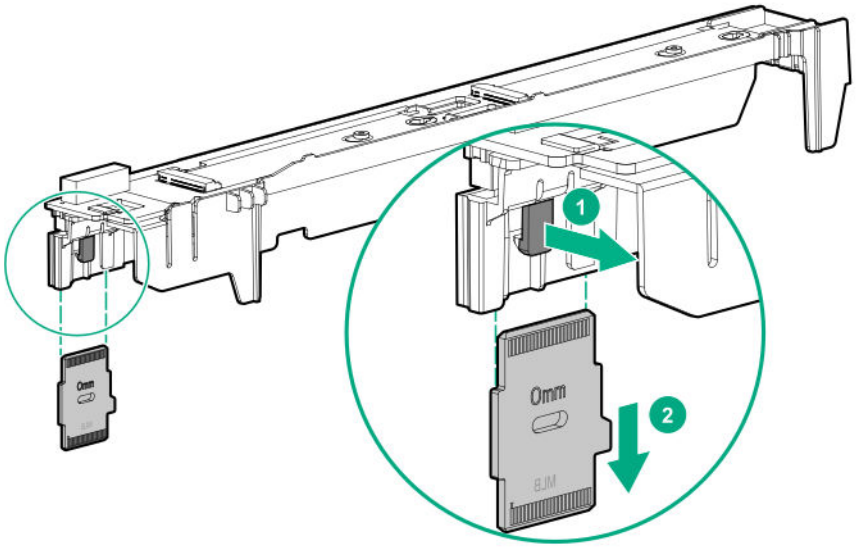

7. Remove the M.2 riser board from the left DIMM baffle.

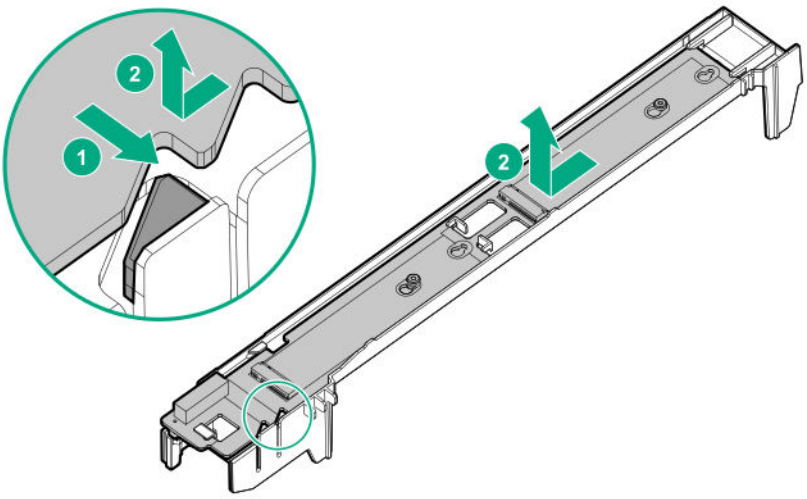

Installing the M.2 riser board and M.2 interposer board

The M.2 riser board supports two M.2 SSDs. This server blade does not support mixing M.2 SSD sizes or bus protocols.

Prerequisites

To install the M.2 SSDs on the M.2 riser board, you need a No. 1 Phillips screwdriver.

Procedure

1. **Power down the server blade**.
2. **Remove the server blade**.
3. Place the server blade on a flat, level work surface.
4. Remove the access panel (**Removing the access panel**).
5. Remove the left DIMM baffle.

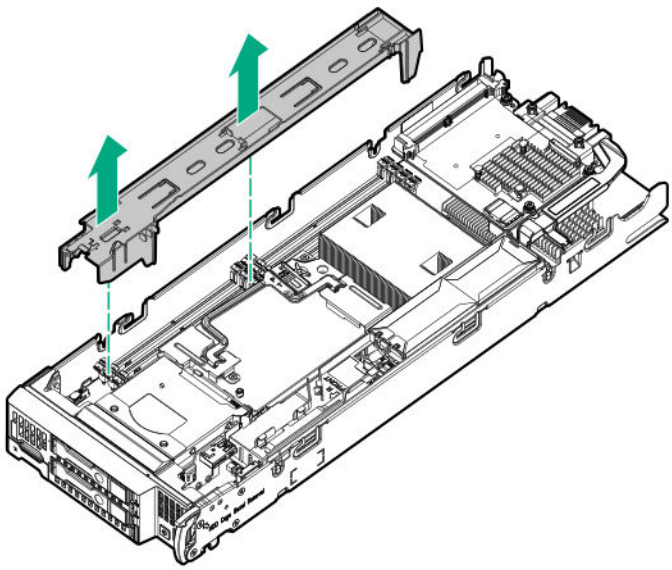

6. Verify that the PEM nuts and rubber stoppers are in the correct location to support the length of the M.2 SSDs being installed. Relocate the PEM nuts and rubber stoppers, if necessary.

   See **Relocate the PEM nut and rubber stopper**.

7. Install the M.2 SSDs on the M.2 riser board.

   See **Removing and replacing an M.2 SSD**.

8. Align and install the M.2 riser board on the left DIMM baffle.

   IMPORTANT: Be sure that the M.2 riser board aligns with the 7 guides and the triangular notch on the left DIMM baffle.

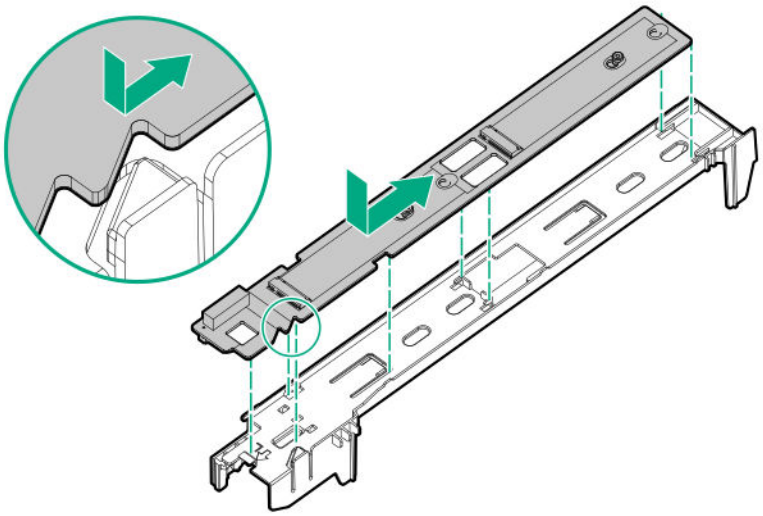

9. Install the M.2 interposer board on the left DIMM baffle.

IMPORTANT: MLB is printed on the M.2 interposer board to indicate edge of the board that connects to the system board. When the M.2 interposer board is installed, MLB must face out towards the edge of the server blade.

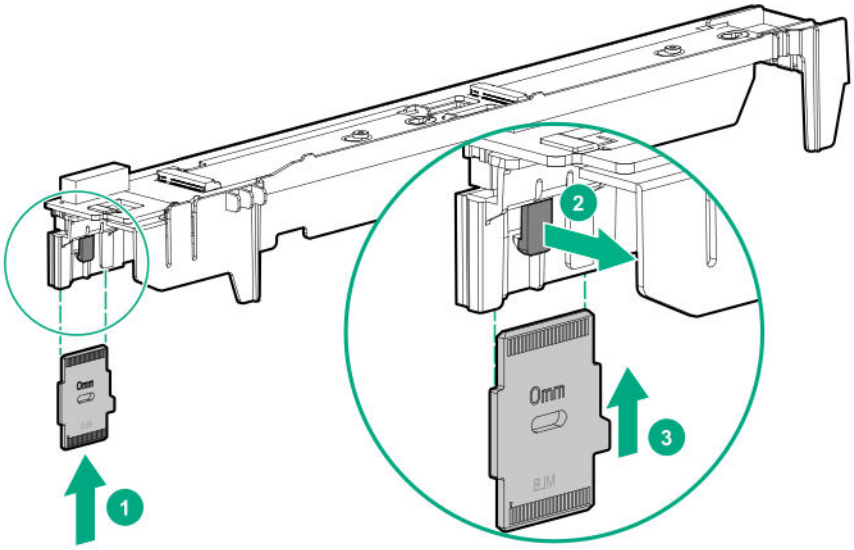

10. Align and install the left DIMM baffle in the server blade.

IMPORTANT: When installing each DIMM baffle, be sure that the alignment tabs engage with the side of the server blade.

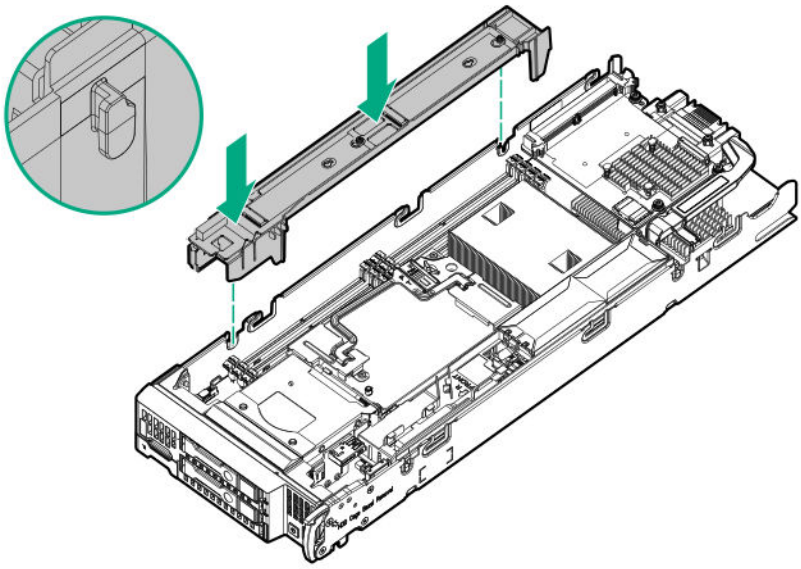

11. **Replacing the access panel**.
12. **Install the server blade**.
13. **Power up the server blade**.

Removing and replacing the access panel

Removing the access panel

Procedure

1. Power down the server blade.
2. Remove the server blade.
3. Place the server blade on a flat, level work surface.
4. Remove the access panel.

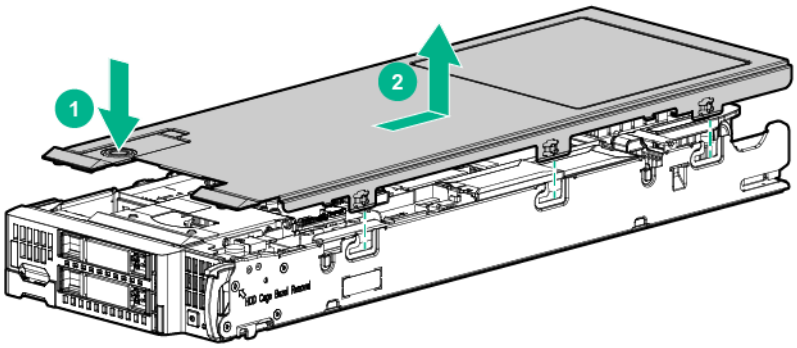

More information

Power down the server blade
Remove the server blade

Replacing the access panel

Procedure

1. Align the access panel with the guides on the server blade in all six locations and place the access panel on the server blade.
2. Slide the access panel forward until it clicks into place.

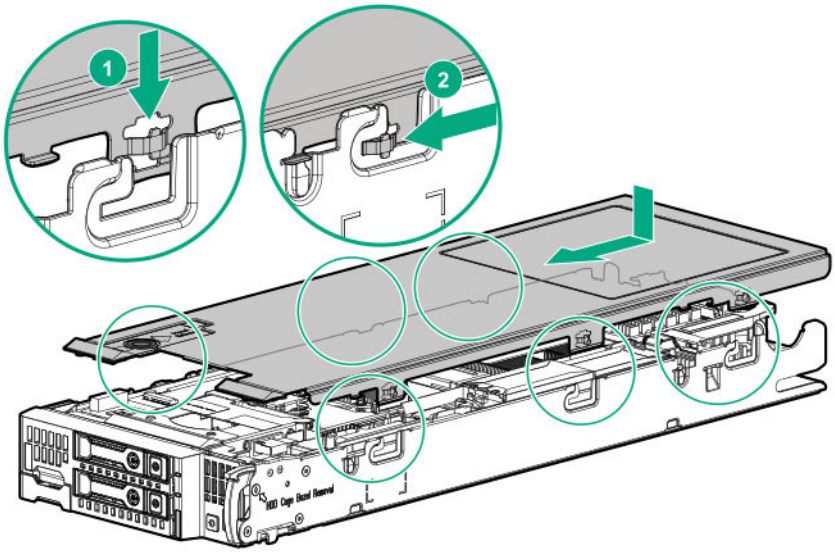

3. Install the server blade.
4. Power up the server blade.

More information

Power up the server blade
Install the server blade

Removing and replacing the drive bay options

Removing and replacing a drive blank

Remove the component as indicated.

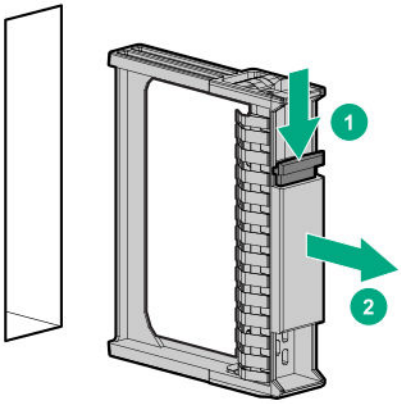

CAUTION: To prevent improper cooling and thermal damage, do not operate the server blade unless all device bays are populated with either a component or a blank.

To replace the blank, slide the blank into the bay until it locks into place.

Removing and replacing an SFF drive

Procedure

1. Determine the status of the drive from the drive LED definitions.
2. Back up all data on the drive.
3. Remove the drive.

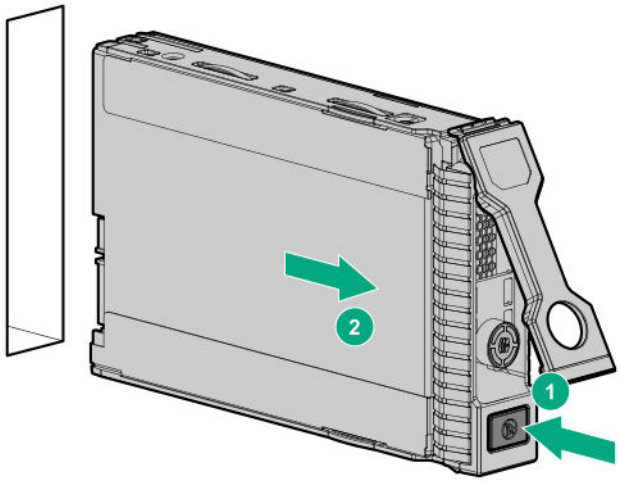

To replace the drive, slide the drive into the bay until it is fully seated, and then close the latch handle to lock the drive in the bay.

More information

Hot-plug drive LED definitions

Removing and replacing an NVMe drive

Procedure

1. Observe the LED status of the drive and determine if it can be removed.
2. Remove the drive:
   a. Press the power button.
      The Do Not Remove button illuminates and flashes. Wait until the flashing stops and the Do Not Remove button is no longer illuminated.
   b. When the Do Not Remove button is no longer illuminated, press the Do Not Remove button and then remove the drive.

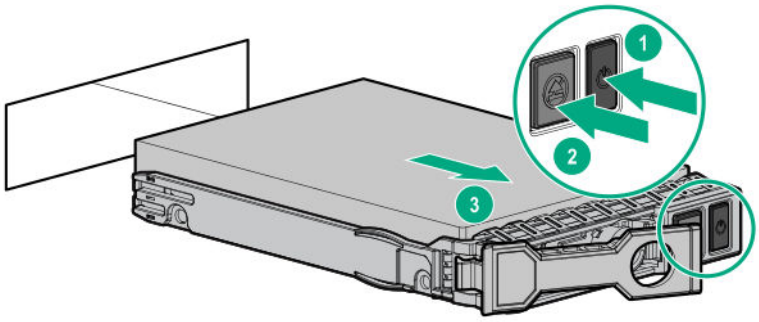

To replace the NVMe SSD, press the Do Not Remove button to open the release lever. Slide the drive completely into the drive bay and close the release lever.

More information

NVMe SSD components

Removing and replacing the SFF Flash Adapter option

CAUTION: To prevent improper cooling and thermal damage, do not operate the server blade or the enclosure unless all device bays are populated with either a component or a blank.

Procedure

1. Power down the server blade.
2. Remove the SFF Flash Adapter.

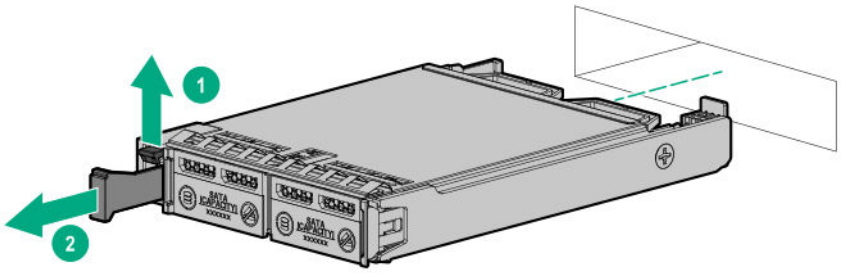

To replace the component, slide the device into the bay. Press firmly near the left-side adapter ejection handle until the latching spring engages in the drive bay.

More information

Power down the server blade

Removing and replacing a uFF drive

Procedure

1. Back up all server blade data.
2. Observe the LED status of the drive and determine if it can be removed.
3. Remove the uFF drive.

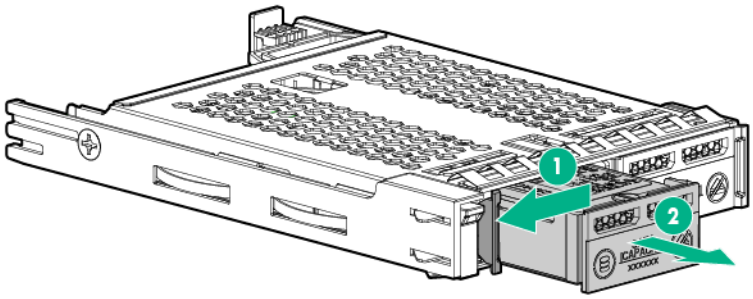

To replace the component, slide the uFF drive into the bay until it is firmly seated in the adapter and clicks into place.

More information

SFF flash adapter components and LED definitions

Removing and replacing DIMM baffles

Removing the DIMM baffles

The server blade has two DIMM baffles.

Procedure

1. Power down the server blade.
2. Remove the server blade.
3. Place the server blade on a flat, level work surface.
4. Remove the access panel.
5. If installed, remove the internal USB drive.

   To locate the internal USB connector, see **System board components**.

   IMPORTANT: When removing a DIMM baffle, do not remove the following options when installed on the DIMM baffle:

   - M.2 enablement option (left DIMM baffle)
   - HPE Smart Storage Battery (right DIMM baffle)

6. If installed, remove the direct connect SATA cable from cable channel on the right air baffle.
7. Remove one or more DIMM baffles:

- DIMM baffle (right side) — If installed, use the blue pull tab to disconnect the HPE Smart Storage Battery cable from the system board.

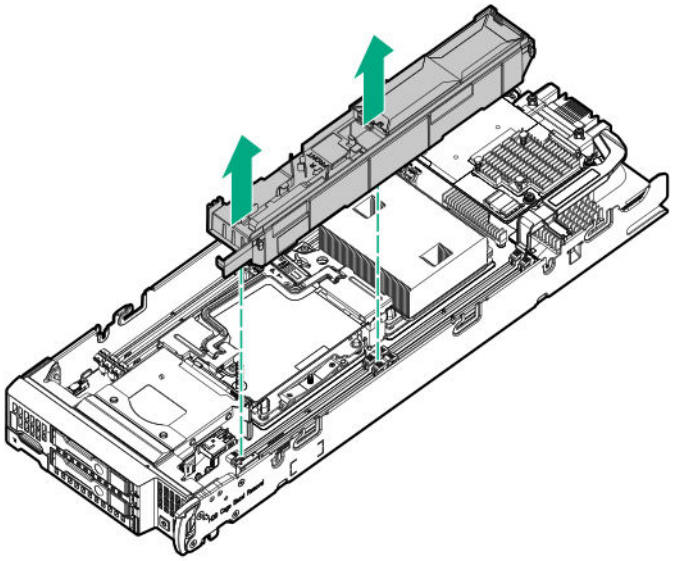

- DIMM baffle (left side)

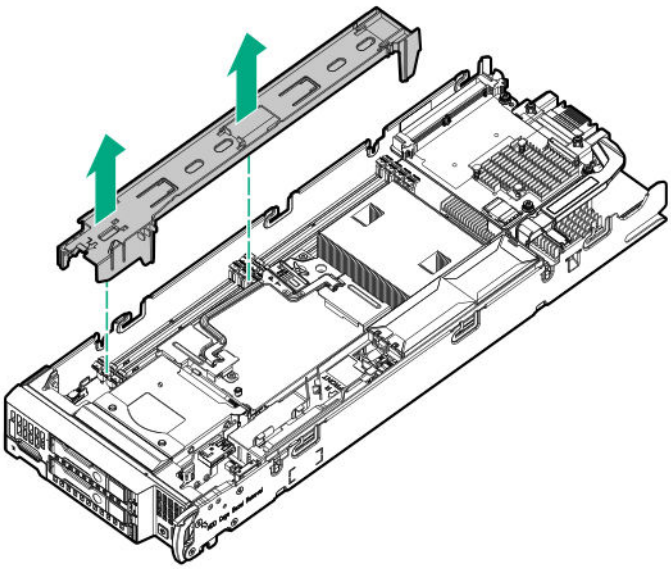

More information

Power down the server blade
Remove the server blade
Removing the access panel

Replacing the DIMM baffles

Procedure

1. Align and install the DIMM baffle:

IMPORTANT: When installing each DIMM baffle, be sure that the alignment tabs engage with the side of the server blade.

- DIMM baffle (right side)

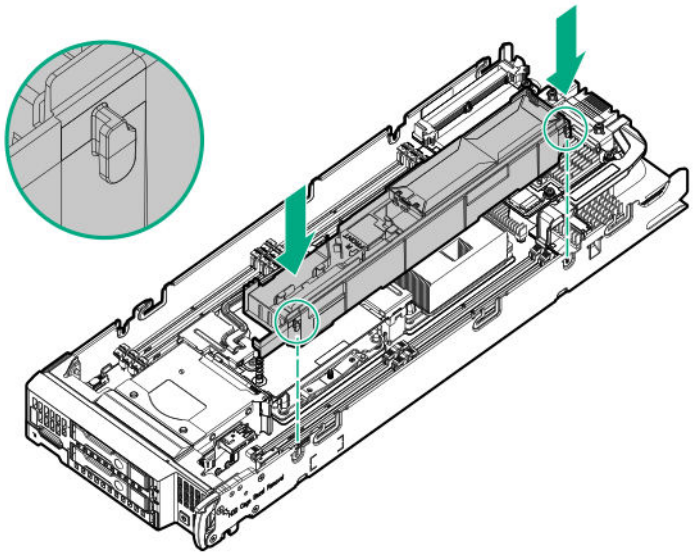

- DIMM baffle (left side)

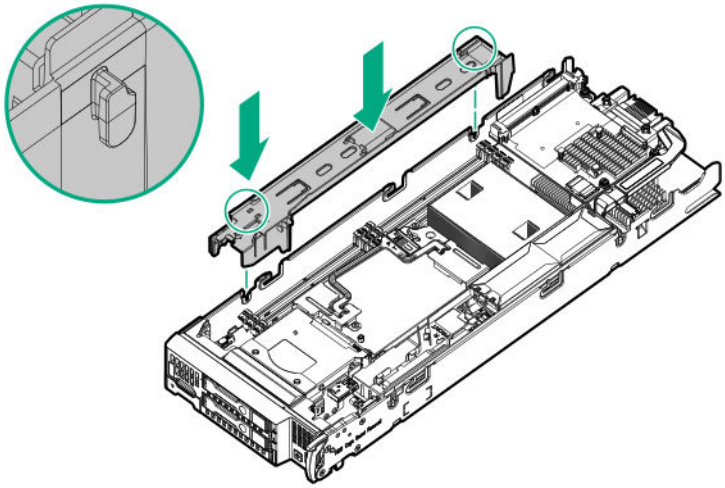

2. If removed, install the internal USB drive.

   To locate the internal USB connector, see **System board components**.

3. If removed, install the direct connect SATA cable.
4. Replace the access panel.
5. Install the server blade.
6. Power up the server blade.

More information

Power up the server blade
Removing and replacing the direct connect SATA cable
Replacing the access panel
Install the server blade

DIMM-processor compatibility

The installed processor determines the type of DIMM that is supported in the server blade:

- First-generation Intel Xeon Scalable processors support DDR4-2666 DIMMs.
- Second-generation Intel Xeon Scalable processors support DDR4-2933 DIMMs.

Mixing DIMM types is not supported. Install only the supported DDR4-2666 or DDR4-2933 DIMMs in the server blade.

Removing and replacing a DIMM

Procedure

1. Power down the server blade.
2. Remove the server blade.
3. Place the server blade on a flat, level work surface.
4. Remove the access panel.
5. Remove both DIMM baffles.

   IMPORTANT: When removing a DIMM baffle, do not remove the following options when installed on the DIMM baffle:

   - M.2 enablement option (left DIMM baffle)
   - HPE Smart Storage Battery (right DIMM baffle)

   IMPORTANT: When removing the right DIMM baffle, use the blue pull tab to disconnect the HPE Smart Storage Battery cable from the system board.

6. Remove the DIMM.

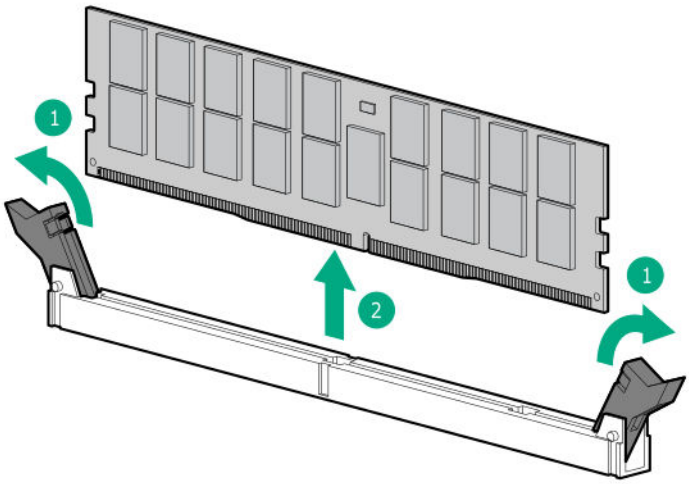

To replace the DIMM, open the DIMM slot latches, and then install the DIMM. Be sure to then replace all other components that were removed for removing the DIMM.

More information

Power down the server blade
Remove the server blade
Removing the access panel
Removing the DIMM baffles

Removing and replacing an NVDIMM

CAUTION: Do not remove an NVDIMM when any LEDs on any NVDIMM in the system are illuminated. Removing an NVDIMM when an LED is illuminated might cause a loss of data.

CAUTION: Electrostatic discharge can damage electronic components. Be sure you are properly grounded before beginning this procedure.

CAUTION: Failure to properly handle DIMMs can cause damage to DIMM components and the system board connector.

To identify NVDIMMs installed in the server blade, see **NVDIMM identification**

Prerequisites

Before replacing memory, read the memory configuration and population guidelines in the server user guide.

Procedure

1. Observe **NVDIMM relocation guidelines**.
2. **Power down the server blade**.
3. **Remove the server blade**.
4. Place the server blade on a flat, level work surface.
5. Remove the access panel (**Removing the access panel**).

IMPORTANT: When removing a DIMM baffle, do not remove the following options when installed on the DIMM baffle:

- M.2 enablement option (left DIMM baffle)
- HPE Smart Storage Battery (right DIMM baffle)

IMPORTANT: When removing the right DIMM baffle, use the blue pull tab to disconnect the HPE Smart Storage Battery cable from the system board.

6. Remove both DIMM baffles (**Removing the DIMM baffles**).
7. Observe the NVDIMM LEDs. Do not remove an NVDIMM when any NVDIMM LED in the system is illuminated.
8. Remove the NVDIMM-N.

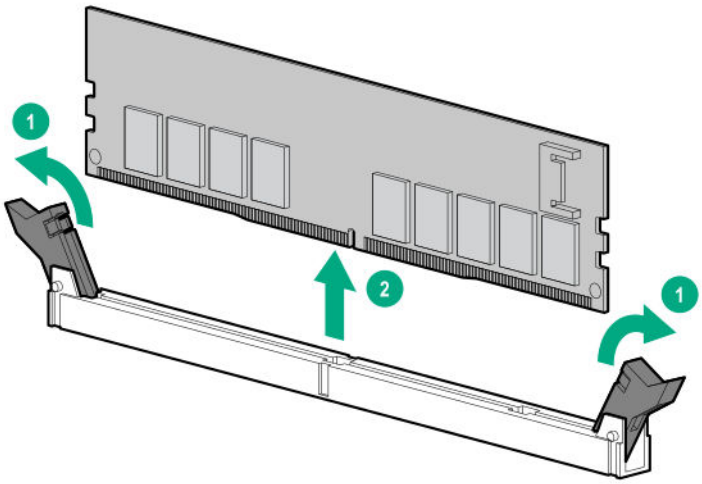

To replace the component, reverse the removal procedure.

NVDIMM-processor compatibility

HPE 16GB NVDIMMs are only supported in servers with first-generation Intel Xeon Scalable processors installed.

DIMM and NVDIMM population information

For specific DIMM and NVDIMM population information, see the DIMM population guidelines on the Hewlett Packard Enterprise website (**http://www.hpe.com/docs/memory-population-rules**).

NVDIMM sanitization

Media sanitization is defined by NIST SP800-88 Guidelines for Media Sanitization (Rev 1, Dec 2014) as "a general term referring to the actions taken to render data written on media unrecoverable by both ordinary and extraordinary means."

The specification defines the following levels:

- Clear: Overwrite user-addressable storage space using standard write commands; might not sanitize data in areas not currently user-addressable (such as bad blocks and overprovisioned areas)
- Purge: Overwrite or erase all storage space that might have been used to store data using dedicated device sanitize commands, such that data retrieval is "infeasible using state-of-the-art laboratory techniques"
- Destroy: Ensure that data retrieval is "infeasible using state-of-the-art laboratory techniques" and render the media unable to store data (such as disintegrate, pulverize, melt, incinerate, or shred)

The NVDIMM-N Sanitize options are intended to meet the Purge level.

For more information on sanitization for NVDIMMs, see the following sections in the *HPE 16GB NVDIMM User Guide* on the Hewlett Packard Enterprise website (**http://www.hpe.com/info/nvdimm-docs**):

- NVDIMM sanitization policies
- NVDIMM sanitization guidelines
- Setting the NVDIMM-N Sanitize/Erase on the Next Reboot Policy

NIST SP800-88 *Guidelines for Media Sanitization* (Rev 1, Dec 2014) is available for download from the NIST website (**http://nvlpubs.nist.gov/nistpubs/SpecialPublications/NIST.SP.800-88r1.pdf**).

NVDIMM relocation guidelines

Requirements for relocating NVDIMMs or a set of NVDIMMs when the data must be preserved

- The destination server blade hardware must match the original server blade hardware configuration.
- All System Utilities settings in the destination server blade must match the original System Utilities settings in the original server blade.
- If NVDIMM-Ns are used with NVDIMM Interleaving ON mode in the original server blade, do the following:
  - Install the NVDIMMs in the same DIMM slots in the destination server blade.
  - Install the entire NVDIMM set (all the NVDIMM-Ns on the processor) on the destination server blade.

  This guideline would apply when replacing a system board due to system failure.

  If any of the requirements cannot be met during NVDIMM relocation, do the following:
  - Manually back up the NVDIMM-N data before relocating NVDIMM-Ns to another server blade.
  - Relocate the NVDIMM-Ns to another server blade.
  - Sanitize all NVDIMM-Ns on the new server blade before using them.

Requirements for relocating NVDIMMs or a set of NVDIMMs when the data does not have to be preserved

If data on the NVDIMM-N or set of NVDIMM-Ns does not have to be preserved, then

- Move the NVDIMM-Ns to the new location and sanitize all NVDIMM-Ns after installing them to the new location. For more information, see **NVDIMM sanitization**.
- Observe all DIMM and NVDIMM population guidelines. For more information, see **DIMM and NVDIMM population information**.
- Observe the process for removing an NVDIMM.

- Observe the process for installing an NVDIMM.
- Review and configure the system settings for NVDIMMs. For more information, see **Configuring the server blade for NVDIMMs** .

Recovering restored data from an NVDIMM-N DRAM

CAUTION: Do not remove an NVDIMM when any LEDs on any NVDIMM in the system are illuminated. Removing an NVDIMM when an LED is illuminated might cause a loss of data.

CAUTION: Electrostatic discharge can damage electronic components. Be sure you are properly grounded before beginning this procedure.

CAUTION: Failure to properly handle DIMMs can damage the DIMM components and the system board connector. For more information, see the DIMM handling guidelines in the troubleshooting guide for your product on the Hewlett Packard Enterprise website:

- HPE ProLiant Gen10 (**https://www.hpe.com/info/gen10-troubleshooting**)
- HPE Synergy (**https://www.hpe.com/info/synergy-troubleshooting**)

When the NVDIMM-N DRAM contains the only copy of restored data, perform the following procedure to recover the information:

Procedure

1. Copy the data from the NVDIMM to some other storage device (such as SSD, HDD, or another NVDIMM) as soon as possible (before cold reset or power loss).
2. Power down the server blade.
3. Extend or remove the server blade.
4. Remove the access panel.
5. Remove all components necessary to access the server blade DIMM slots and the HPE Smart Storage Battery.

   For more information, see the server blade maintenance and service guide on the Hewlett Packard Enterprise website (**http://www.hpe.com/info/enterprise-docs**).
6. Observe the NVDIMM LEDs. Do not remove an NVDIMM when any NVDIMM LED in the system is illuminated.
7. Remove the NVDIMM-N.
8. Install a replacement NVDIMM-N.
9. Install any components removed to access the DIMM slots and the HPE Smart Storage Battery.
10. Install the access panel.
11. Install the server blade in the rack.
12. Power up the server blade.
13. Sanitize the replacement NVDIMM.
14. Copy the data from the storage device to the NVDIMM-N.

Configuring the server blade for NVDIMMs

After installing NVDIMMs, configure the server blade for NVDIMMs. For information on configuring settings for NVDIMMs, see the *HPE 16GB NVDIMM User Guide* on the Hewlett Packard Enterprise website (**http://www.hpe.com/info/nvdimm-docs**).

The server blade can be configured for NVDIMMs using either of the following:

- UEFI System Utilities—Use System Utilities through the Remote Console to configure the server blade for NVDIMM memory options by pressing the **F9** key during POST. For more information about UEFI System Utilities, see the Hewlett Packard Enterprise website (**http://www.hpe.com/info/uefi/docs**).
- iLO RESTful API for HPE iLO 5—For more information about configuring the system for NVDIMMs, see **https://hewlettpackard.github.io/ilo-rest-api-docs/ilo5/**.

Removing and replacing the M.2 enablement option

Removing the M.2 enablement option

Procedure

1. Power down the server blade.
2. Remove the server blade.
3. Place the server blade on a flat, level work surface.
4. Remove the access panel.
5. Remove the left DIMM baffle.
6. Remove the M.2 interposer board.

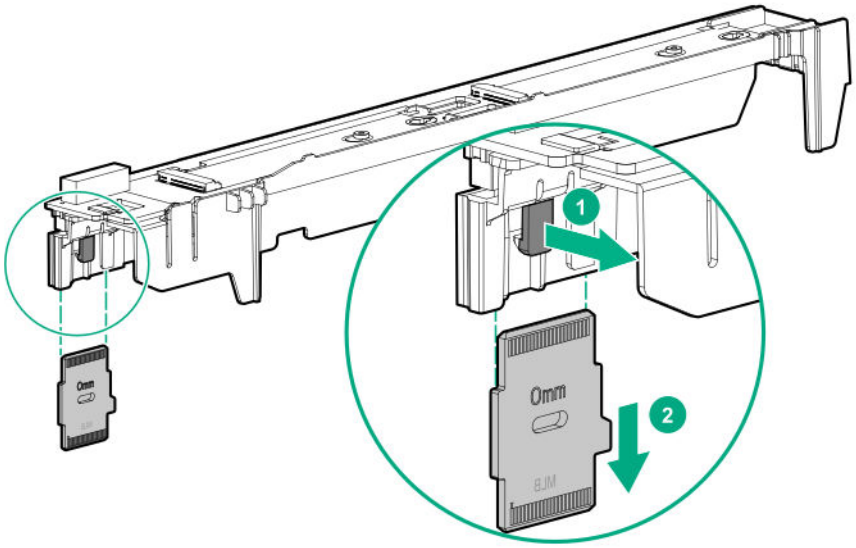

7. Remove the M.2 riser board from the left DIMM baffle.

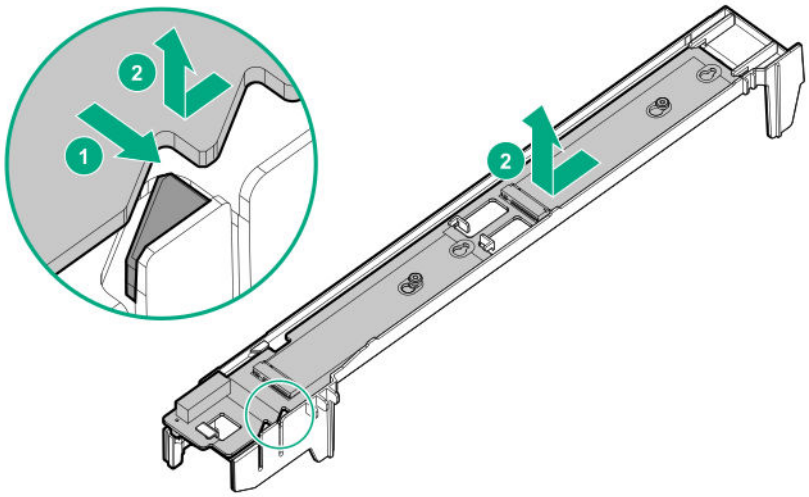

More information

Power down the server blade
Remove the server blade
Removing the access panel
Removing the DIMM baffles

Replacing the M.2 enablement option

Procedure

1. Verify that the PEM nuts and rubber stoppers are in the correct location to support the length of the M.2 SSDs being installed. If necessary, relocate the PEM nuts and rubber stoppers. For more information, see **Relocate the PEM nut and rubber stopper**.
2. Install the M.2 SSD options on the M.2 riser board.
3. Install the M.2 riser board on the left DIMM baffle.

   To ensure proper installation, be sure that the M.2 riser board aligns with all alignment guides on the air baffle.

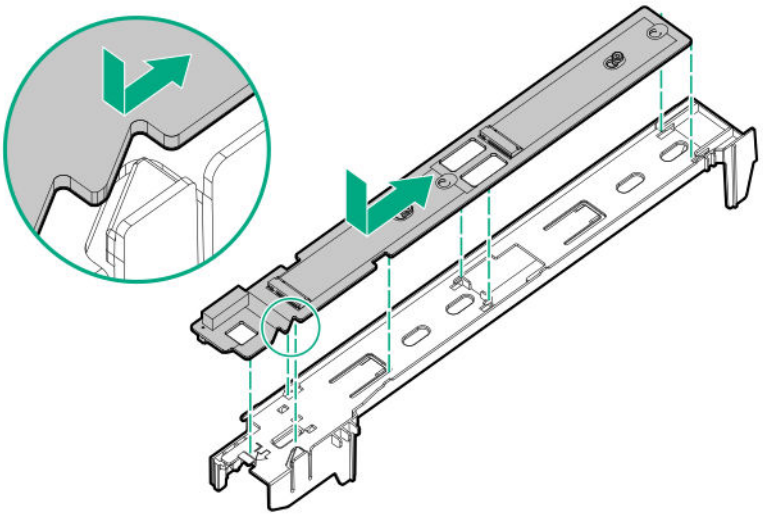

4. Install the M.2 interposer board on the left DIMM baffle until it clicks into place.

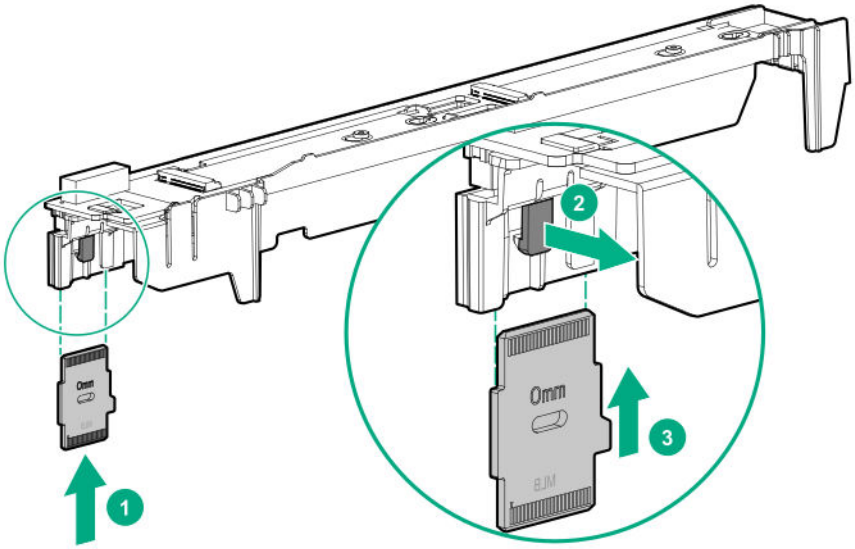

5. Install the left DIMM baffle.
6. Install the access panel.
7. Install the server blade.
8. Power up the server blade.

More information

Power up the server blade
Removing and replacing an M.2 SSD
Replacing the DIMM baffles
Replacing the access panel
Install the server blade

Removing and replacing an M.2 SSD

Prerequisites

A No. 1 Phillips screwdriver is required to perform this procedure.

Procedure

1. Power down the server blade.
2. Remove the server blade.
3. Place the server blade on a flat, level work surface.
4. Remove the access panel.
5. Remove the left DIMM baffle.
6. Remove the screw with a No. 1 Phillips screwdriver, and then remove the M.2 SSD.

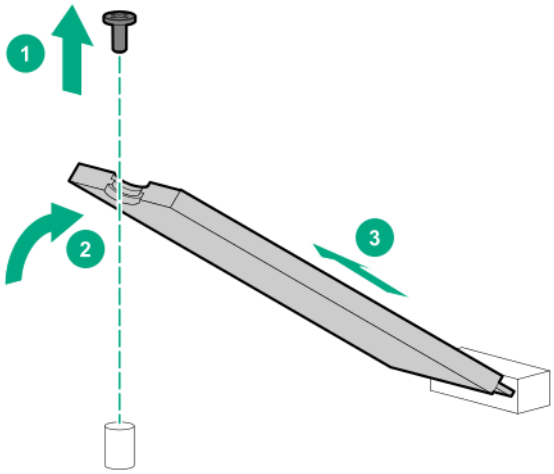

7. If necessary, repeat the M.2 SSD removal procedure for the second drive.

To replace the component, reverse the removal the procedure.

More information

Power down the server blade
Remove the server blade
Removing the access panel
Removing the DIMM baffles

Removing and replacing the direct connect SATA cable

Prerequisites

A T-15 Torx screwdriver is required to perform this procedure.

Procedure

1. Power down the server blade.
2. Remove the server blade.
3. Place the server blade on a flat, level work surface.
4. Remove the access panel.
5. Remove the direct connect SATA cable.

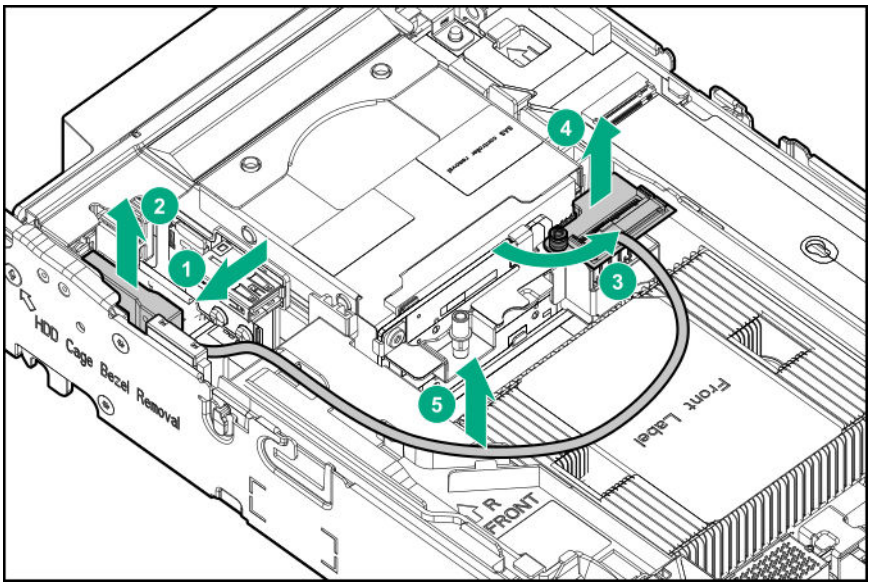

To replace the component, reverse the removal procedure.

More information

Power down the server blade
Remove the server blade
Removing the access panel

Removing and replacing the mezzanine assembly

Removing the mezzanine assembly

Procedure

1. Power down the server blade.
2. Remove the server blade.
3. Place the server blade on a flat, level work surface.
4. Remove the access panel.
5. Remove the mezzanine assembly.

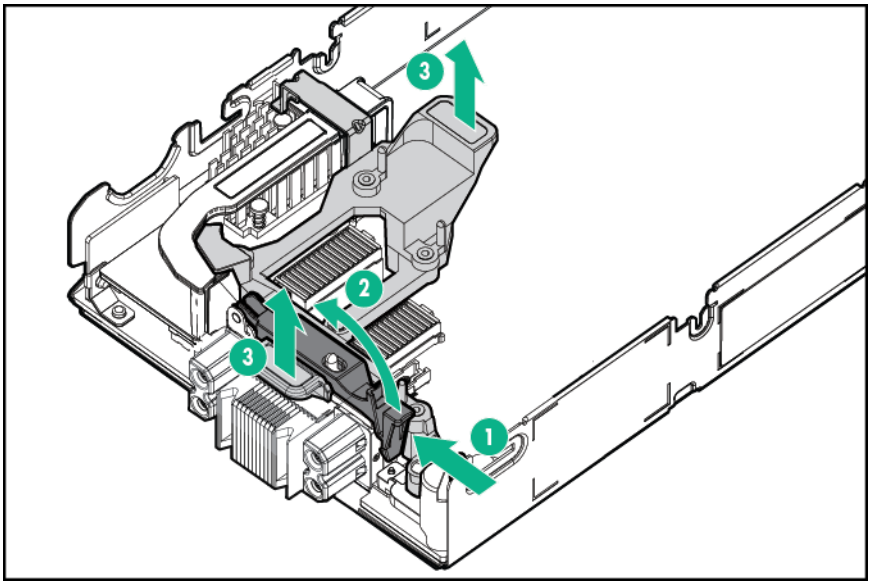

More information

Power down the server blade
Remove the server blade
Removing the access panel

Replacing the mezzanine assembly

Procedure

1. Align the mezzanine assembly with the guide pins, and then install the mezzanine assembly on the system board.
2. Press down firmly on the mezzanine assembly handles, and then close the mezzanine assembly latch.

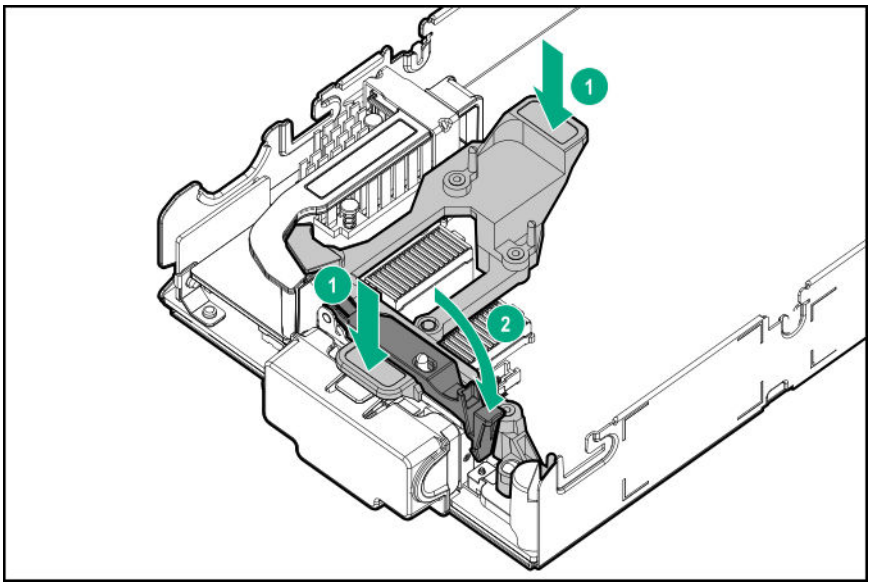

3. Install the access panel.

4. Install the server blade.
5. Power up the server blade.

More information

Power up the server blade
Replacing the access panel
Install the server blade

Removing and replacing the mezzanine card options

Removing the mezzanine card options

Prerequisites

A T-15 Torx screwdriver is required to perform this procedure.

Procedure

1. Power down the server blade.
2. Remove the server blade.
3. Place the server blade on a flat, level work surface.
4. Remove the access panel.
5. Remove the mezzanine assembly.
6. Remove the mezzanine card from the mezzanine assembly.

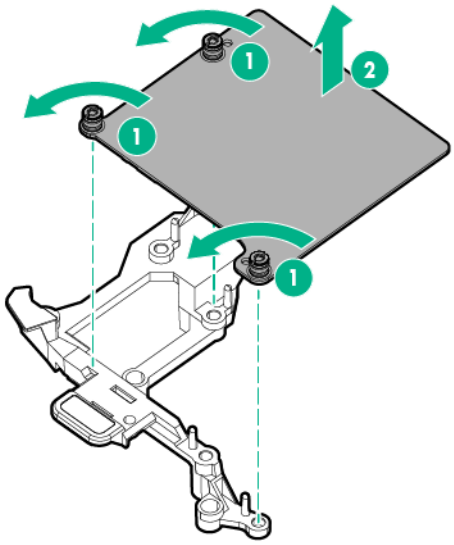

More information

Power down the server blade
Remove the server blade
Removing the access panel

Replacing the mezzanine card options

Prerequisites

A T-15 Torx screwdriver is required to perform this procedure.

Procedure

1. Align the mezzanine card using the appropriate guide pins on the mezzanine assembly.

   For more information, see **Mezzanine connector guide pin locations**.

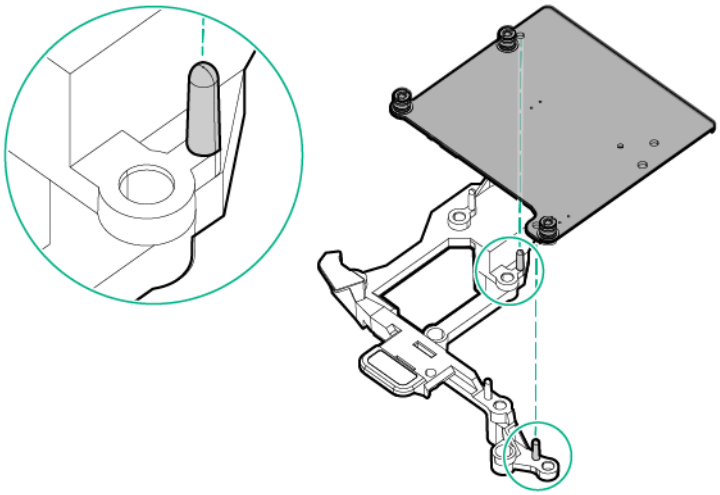

2. Install the mezzanine card in the mezzanine assembly, and then tighten the mezzanine card screws to secure the card to the mezzanine assembly.

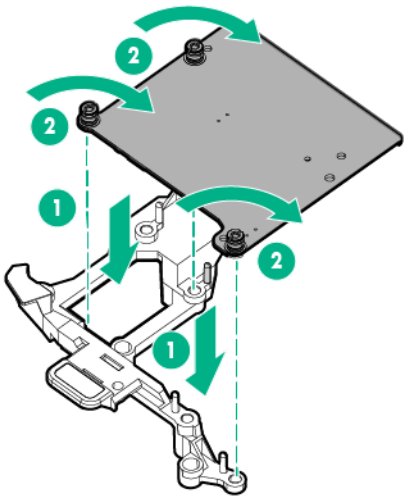

3. Align the mezzanine assembly with the guide pins on the system board, and then install the mezzanine assembly on the system board.
4. Press down firmly on the mezzanine assembly handles, and then close the mezzanine assembly latch.

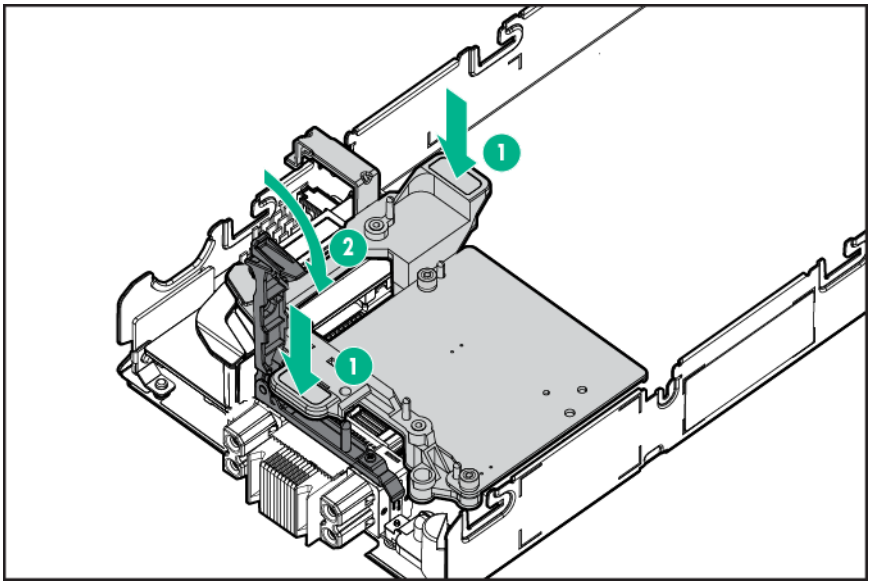

5. Install the access panel.
6. Install the server blade.
7. Power up the server blade.

More information

Power up the server blade
Replacing the access panel
Install the server blade

Removing and replacing the FlexibleLOM adapter

Procedure

1. Power down the server blade.
2. Remove the server blade.
3. Place the server blade on a flat, level work surface.
4. Remove the access panel.
5. Remove the mezzanine assembly.
6. Use the FlexibleLOM handle to remove the FlexibleLOM.

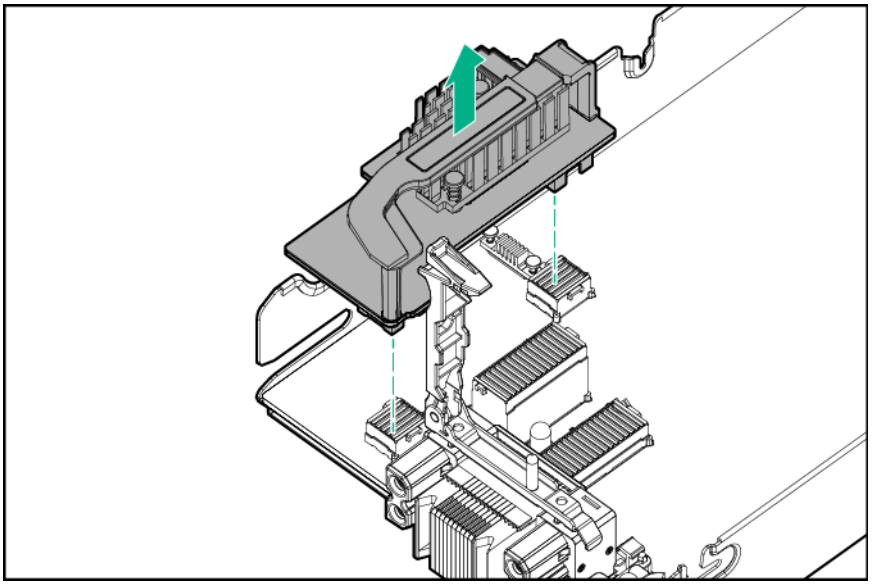

To replace the component, reverse the removal procedure.

More information

Power down the server blade
Remove the server blade
Removing the access panel
Removing the mezzanine assembly

Removing and replacing a storage controller or NVMe pass-through board

Removing a storage controller or NVMe pass-through board

The server blade supports either a storage controller or an NVMe pass-through board at a time, not both.

Procedure

1. Power down the server blade.
2. Remove the server blade.
3. Place the server blade on a flat, level work surface.
4. Remove the access panel.
5. Prepare the storage controller or the NVMe pass-through board for removal.

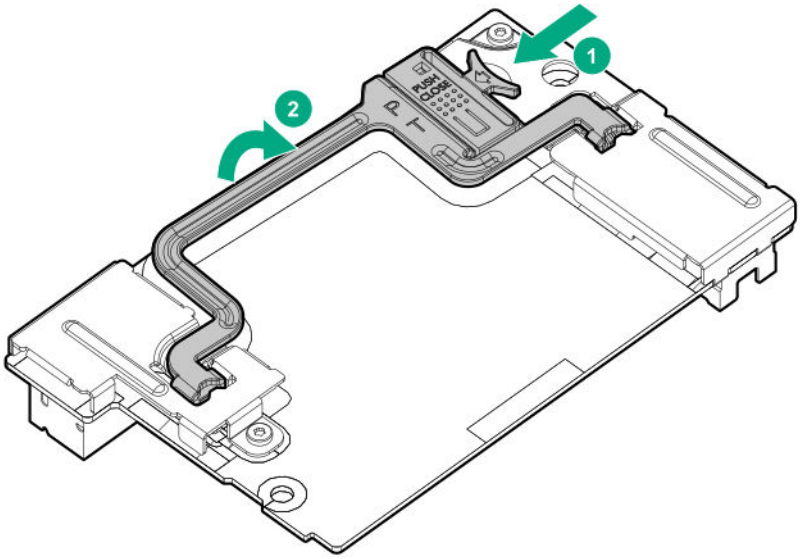

6. Remove the storage controller or NVMe pass-through board.

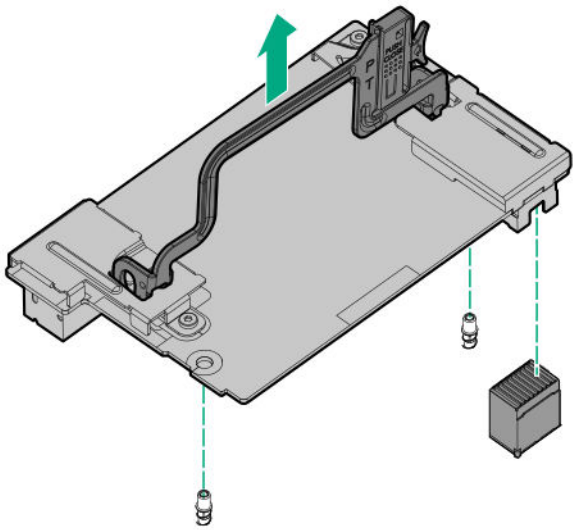

More information

Power down the server blade
Remove the server blade
Removing the access panel

Replacing a storage controller or NVMe pass-through board

Procedure

1. Back up all server blade data.
2. Power down the server blade.
3. Remove the server blade.
4. Place the server blade on a flat, level work surface.

5. Remove the access panel.

6. Remove the direct connect SATA cable, if installed.

7. Prepare the storage controller for installation.

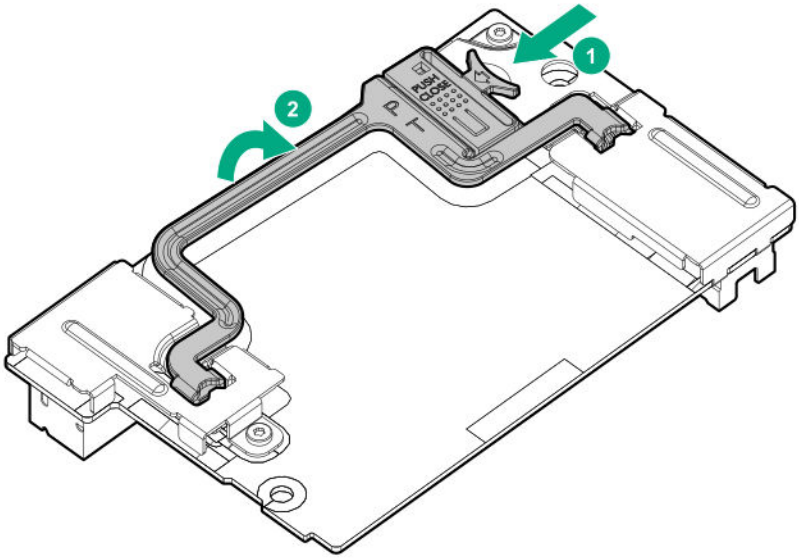

8. Align the storage controller with the alignment pins and lower it onto the connector.

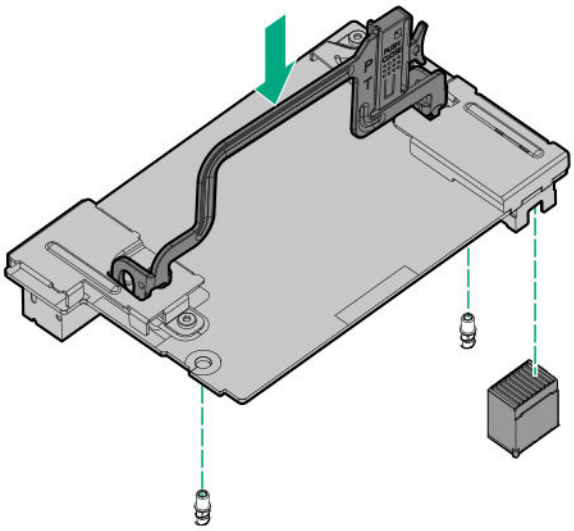

9. Close the storage controller handle to seat the storage controller on the connector.

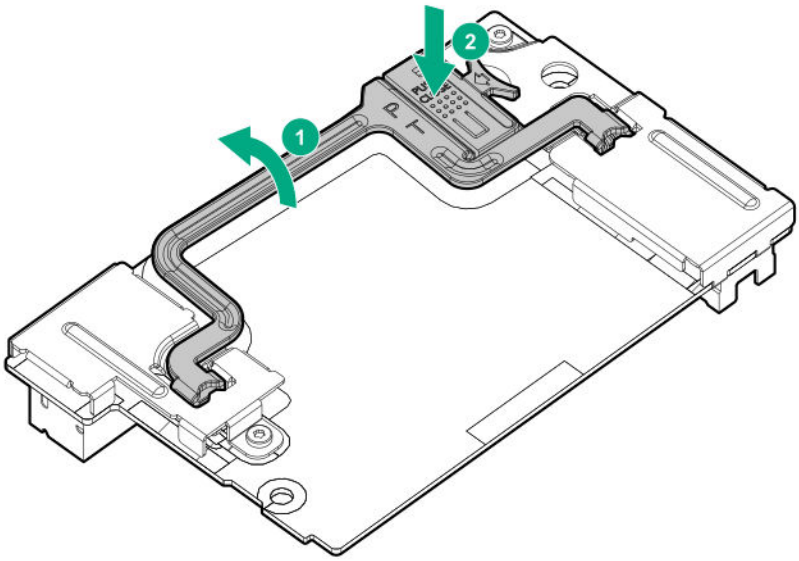

10. Install the access panel.
11. Install the server blade.
12. Power up the server blade.

More information

Power up the server blade
Power down the server blade
Remove the server blade
Removing the access panel
Removing and replacing the direct connect SATA cable
Replacing the access panel
Install the server blade

Removing and replacing the HPE Smart Storage Battery

NOTE: System ROM and firmware messages might display "energy pack" in place of "Smart Storage Battery." Energy pack refers to both HPE Smart Storage batteries and HPE Smart Storage Hybrid capacitors.

Removing the HPE Smart Storage Battery

WARNING: The server blade may contain internal replaceable battery cells or battery packs. A risk of fire, burns, or explosions exists if the battery pack is not properly handled. To reduce the risk of personal injury:

- Do not attempt to recharge the battery outside of the installed application.
- Do not expose the battery to temperatures higher than 60°C (140°F).
- Do not disassemble, crush, puncture, short external contacts, or dispose of the battery in fire or water.
- Replace only with the Hewlett Packard Enterprise spare battery designated for this product. Dispose of used batteries according to the manufacturer's instructions and local disposal requirements.
- For battery holders (for example, coin cells), observe the correct polarity when changing the battery/cell. A danger of explosion exists if the battery is installed incorrectly.

Procedure

1. Power down the server blade.
2. Remove the server blade.
3. Place the server blade on a flat, level work surface.
4. Remove the access panel.
5. If installed, remove the direct connect SATA cable.
6. If installed, remove the internal USB drive.

   To locate the internal USB connector, see **System board components**.

   IMPORTANT: When removing a DIMM baffle, do not remove the following options when installed on the DIMM baffle:

   - M.2 enablement option (left DIMM baffle)
   - HPE Smart Storage Battery (right DIMM baffle)

   IMPORTANT: When removing the right DIMM baffle, use the blue pull tab to disconnect the HPE Smart Storage Battery cable from the system board.

7. Remove the right DIMM baffle.
8. Remove the HPE Smart Storage Battery from the right DIMM baffle.

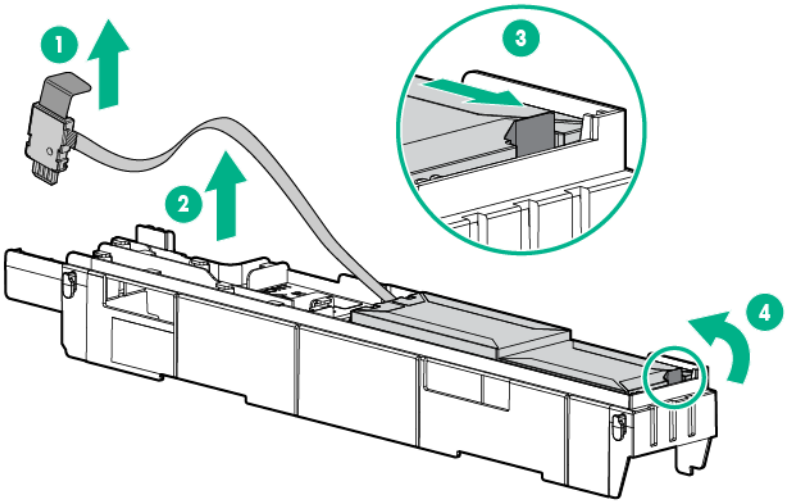

More information

Power down the server blade
Remove the server blade
Removing the access panel
Removing and replacing the direct connect SATA cable
Removing the DIMM baffles

Replacing the HPE Smart Storage Battery

Procedure

1. Install the HPE Smart Storage Battery on the right DIMM baffle.

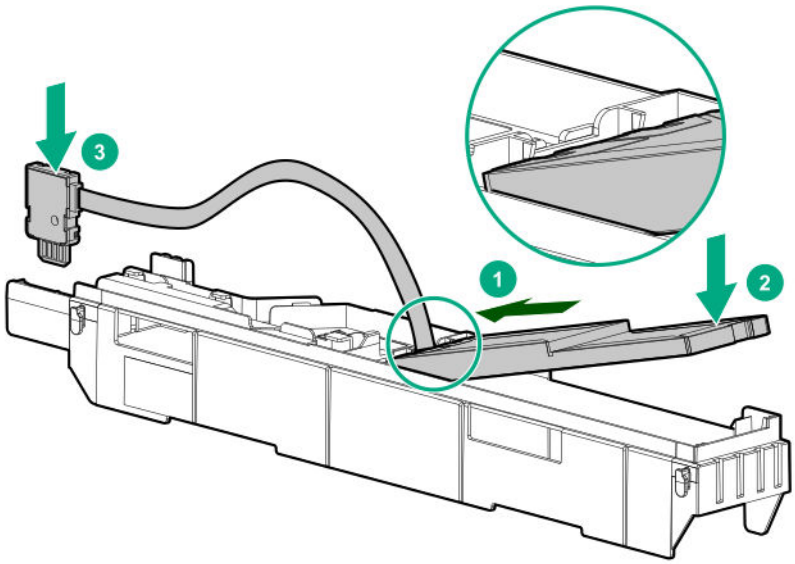

2. Route the cable on the right DIMM baffle.

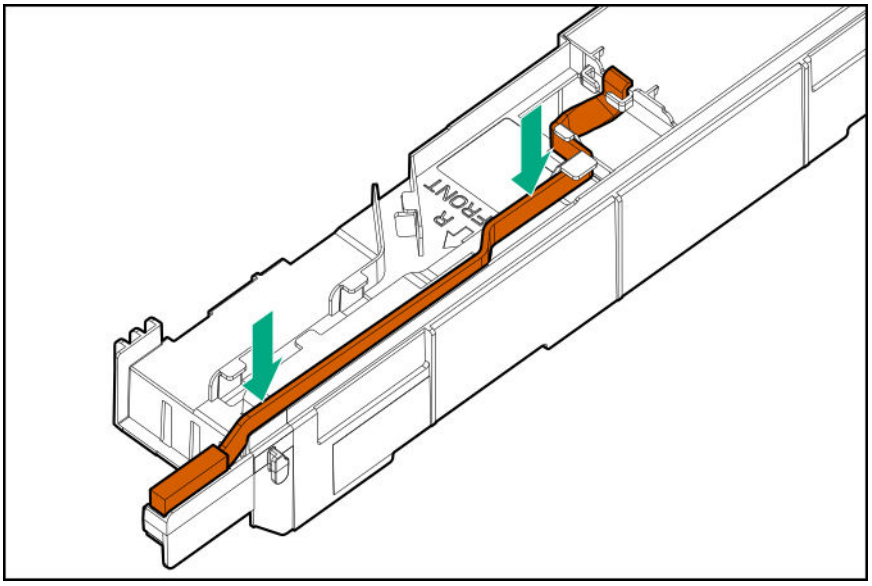

3. Align and install the DIMM baffle.

   Press down on the cable connector to fully seat the HPE Smart Storage Battery cable connector to the system board.

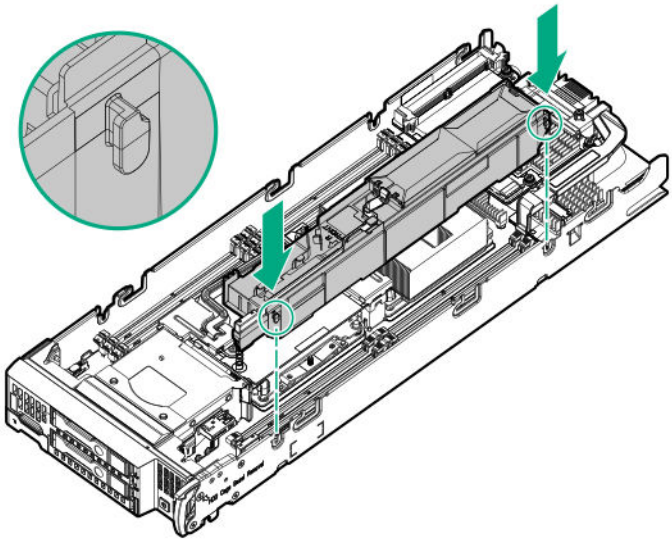

4. If removed, install the direct connect SATA cable.
5. If removed, install the internal USB drive.

   To locate the internal USB connector, see **System board components**.
6. Install the access panel.
7. Install the server blade.
8. Power up the server blade.

More information

Power up the server blade
Removing and replacing the direct connect SATA cable
Replacing the access panel

Install the server blade

Removing and replacing the front panel/drive cage assembly

Prerequisites

A Torx T-15 screwdriver is required to perform this procedure.

Procedure

1. Power down the server blade.
2. Remove the server blade.
3. Place the server blade on a flat, level work surface.
4. Remove the access panel.
5. Remove all drives and drive blanks (**Removing and replacing the drive bay options**).
6. Remove the mezzanine assembly (**Removing the mezzanine assembly**).
7. Do one of the following:
   - Remove the storage controller or the NVMe pass-through board (**Removing a storage controller or NVMe pass-through board**).
   - Remove the direct connect SATA cable (**Removing and replacing the direct connect SATA cable**).
8. Remove the internal USB drive, if installed.
   To locate the internal USB connector, see **System board components**.

   IMPORTANT: When removing a DIMM baffle, do not remove the following options when installed on the DIMM baffle:
   - M.2 enablement option (left DIMM baffle)
   - HPE Smart Storage Battery (right DIMM baffle)

   IMPORTANT: When removing the right DIMM baffle, use the blue pull tab to disconnect the HPE Smart Storage Battery cable from the system board.
9. Remove both DIMM baffles (**Removing the DIMM baffles**).

   CAUTION: Always remove the storage controller or NVMe pass-through board or direct connect SATA cable before removing the front panel/drive cage assembly.
10. Remove the front panel/drive cage assembly.

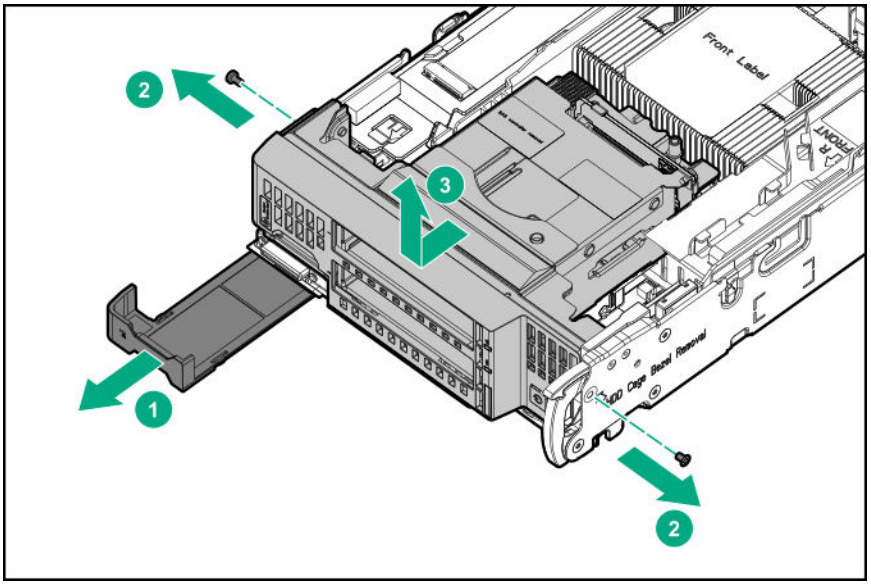

To replace the component, reverse the removal procedure.

More information

Power down the server blade
Remove the server blade
Removing the access panel

Removing and replacing the SAS/SATA or NVMe backplanes

Prerequisites

A T-15 Torx screwdriver is required to perform this procedure.

Procedure

1. Power down the server blade.
2. Remove the server blade.
3. Place the server blade on a flat, level work surface.
4. Remove the access panel.
5. Remove all drives and drive blanks (**Removing and replacing the drive bay options**).

   CAUTION: Always remove all drives and drive blanks before removing the drive backplane.

6. Do one of the following:
   - Remove the storage controller or the NVMe pass-through board (**Removing a storage controller or NVMe pass-through board**).
   - Remove the direct connect SATA cable (**Removing and replacing the direct connect SATA cable**).
7. Remove the internal USB drive, if installed.
   To locate the internal USB connector, see **System board components**.

IMPORTANT: When removing a DIMM baffle, do not remove the following options when installed on the DIMM baffle:

- M.2 enablement option (left DIMM baffle)
- HPE Smart Storage Battery (right DIMM baffle)

IMPORTANT: When removing the right DIMM baffle, use the blue pull tab to disconnect the HPE Smart Storage Battery cable from the system board.

8. Remove both DIMM baffles (**Removing the DIMM baffles**).
9. Remove the front panel/drive cage assembly (**Removing and replacing the front panel/drive cage assembly**).
10. Remove the SAS/SATA or the NVMe drive backplane from the front panel/drive cage assembly.

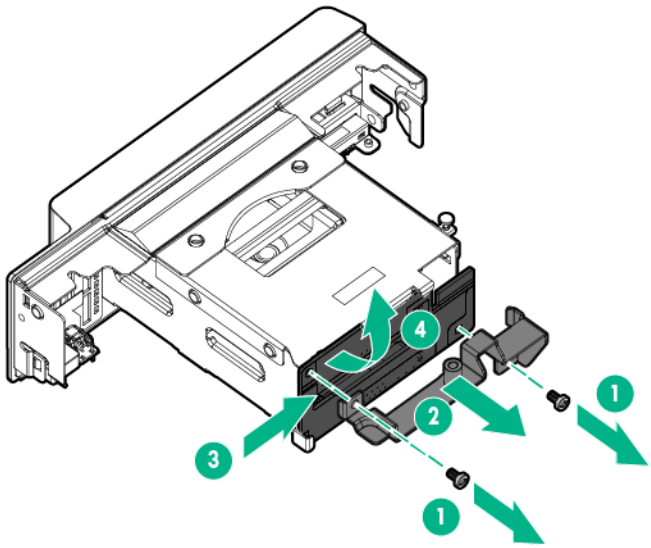

To replace the component, reverse the removal procedure.

More information

Power down the server blade
Remove the server blade
Removing the access panel

Removing and replacing the system battery

If the server blade no longer automatically displays the correct date and time, then replace the battery that provides power to the real-time clock. Under normal use, battery life is 5 to 10 years. This server blade uses a CR2032 battery.

WARNING: The computer contains an internal lithium manganese dioxide, a vanadium pentoxide, or an alkaline battery pack. A risk of fire and burns exists if the battery pack is not properly handled. To reduce the risk of personal injury:

- Do not attempt to recharge the battery.
- Do not expose the battery to temperatures higher than 60°C (140°F).
- Do not disassemble, crush, puncture, short external contacts, or dispose of in fire or water.
- Replace only with the spare designated for this product.

Procedure

1. Power down the server blade.
2. Remove the server blade.
3. Place the server blade on a flat, level work surface.
4. Remove the access panel.
5. Remove the left DIMM baffle.

   IMPORTANT: When removing the left DIMM baffle, do not remove the M.2 enablement option if installed on the DIMM baffle.

6. Locate the system battery on the system board.

   For more information, see **System board components**.

7. Remove the battery.

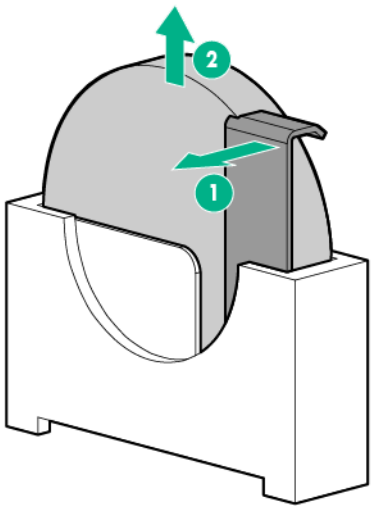

IMPORTANT: Replacing the system board battery resets the system ROM to its default configuration. After replacing the battery, reconfigure the system through UEFI System Utilities.

To replace the component, reverse the removal procedure.

For more information about battery replacement or proper disposal, contact an authorized reseller or an authorized service provider.

More information

Power down the server blade
Remove the server blade
Removing the access panel
Removing the DIMM baffles

Removing and replacing the heatsink blank

Removing the heatsink blank

Procedure

1. Power down the server blade.
2. Remove the server blade.
3. Place the server blade on a flat, level work surface.
4. Remove the access panel.
5. Remove the heatsink blank.

   Retain the heatsink blank for future use.

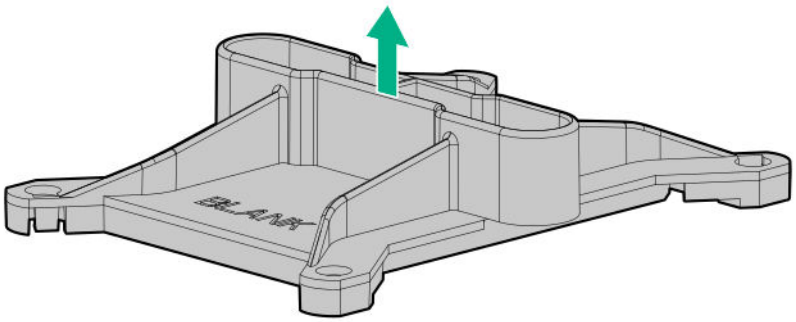

More information

Power down the server blade
Remove the server blade
Removing the access panel

Replacing the heatsink blank

Procedure

1. Install the heatsink blank.

   Be sure to press on the alternate corners shown until the heatsink blank snaps into place on the posts with an audible click.

CAUTION: Failure to completely snap the heatsink blank into place could result in damage to the equipment.

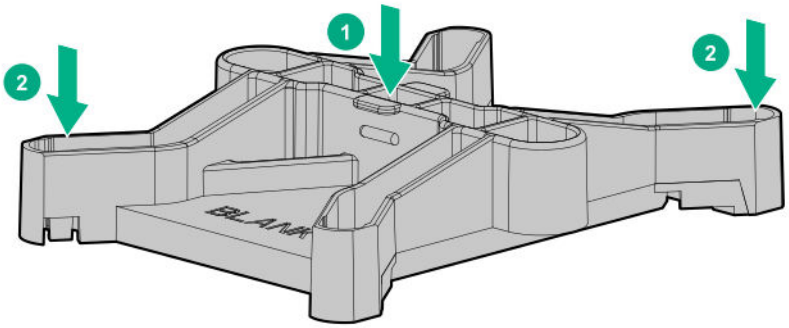

2. Install the access panel.
3. Install the server blade.
4. Power up the server blade.

More information

Power up the server blade
Replacing the access panel
Install the server blade

Removing and replacing the server blade release lever assembly

Removing the server blade release lever assembly

Prerequisites

A T-15 Torx screwdriver is required to perform this procedure.

Procedure

1. Power down the server blade.
2. Remove the server blade.
3. Place the server blade on a flat, level work surface.
4. Remove the access panel.
5. Remove all drives and drive blanks (**Removing and replacing the drive bay options**).
6. Remove the mezzanine assembly (**Removing the mezzanine assembly**).
7. Do one of the following:
   - Remove the storage controller or the NVMe pass-through board (**Removing a storage controller or NVMe pass-through board**).
   - Remove the direct connect SATA cable (**Removing and replacing the direct connect SATA cable**).
8. If installed, remove the internal USB drive.

To locate the internal USB connector, see **System board components**.

IMPORTANT: When removing a DIMM baffle, do not remove the following options when installed on the DIMM baffle:

- M.2 enablement option (left DIMM baffle)
- HPE Smart Storage Battery (right DIMM baffle)

IMPORTANT: When removing the right DIMM baffle, use the blue pull tab to disconnect the HPE Smart Storage Battery cable from the system board.

9. Remove both DIMM baffles (**Removing the DIMM baffles**).
10. Remove the front panel/drive cage assembly (**Removing and replacing the front panel/drive cage assembly**).
11. While holding the system board in place, turn the base pan on its side and remove the two system board screws from the bottom of the base pan.

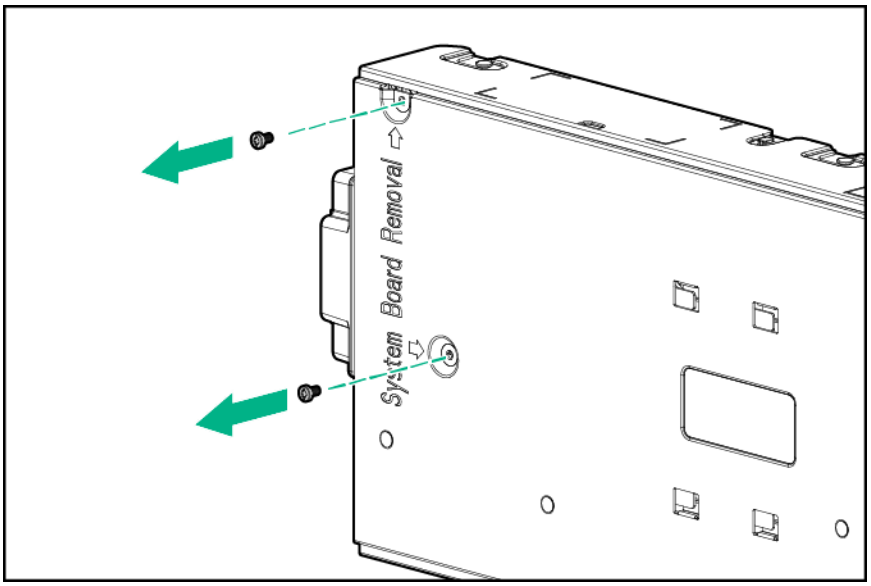

12. Place the server blade on a flat, level work surface.
13. Slide the system board approximately 1.27 cm (0.50 inches) towards the rear of the server and lift the system board from the base pan.

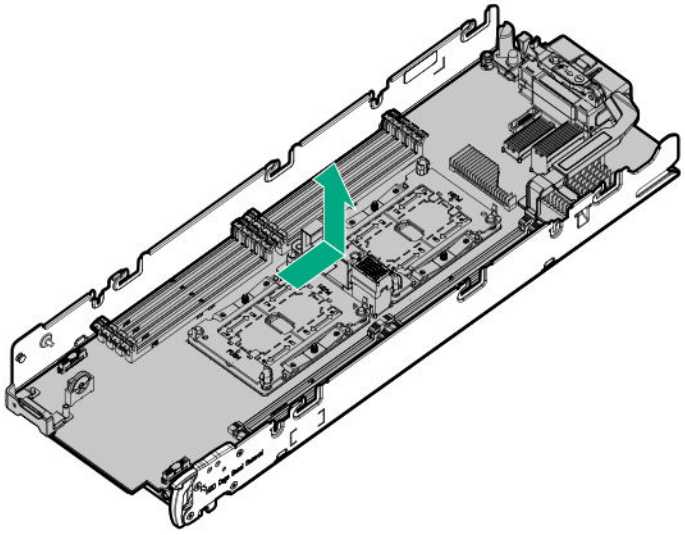

14. Remove the three T-15 screws from the outside of the base pan, and then remove the server blade release lever assembly.

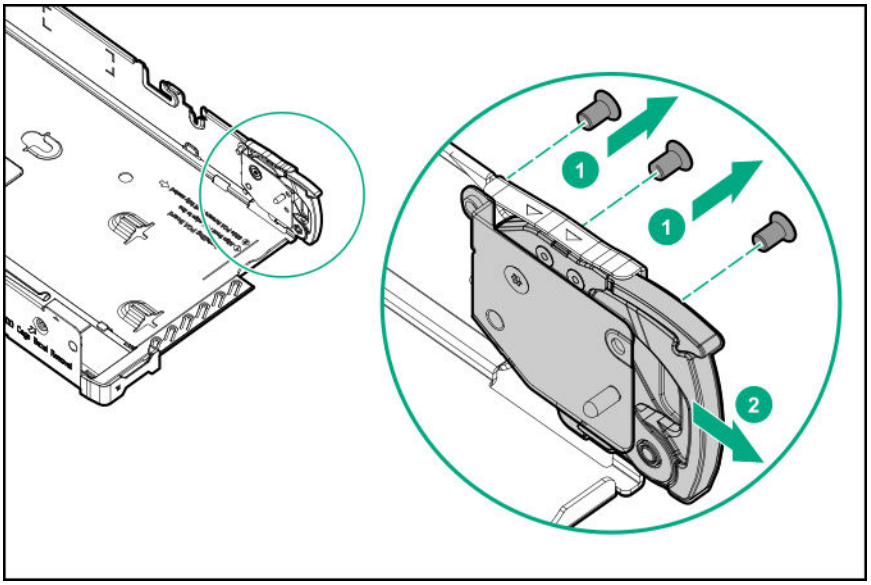

More information

Power down the server blade
Remove the server blade
Removing the access panel

Replacing the server blade release lever assembly

Prerequisites

A T-15 Torx screwdriver is required to perform this procedure.

Procedure

1. Install the server blade release lever bracket.

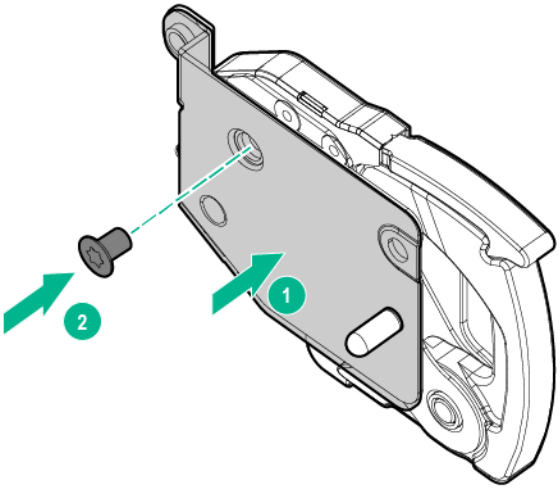

2. Install the server blade release lever assembly, and then install the T-15 screws from the outside of the base pan.

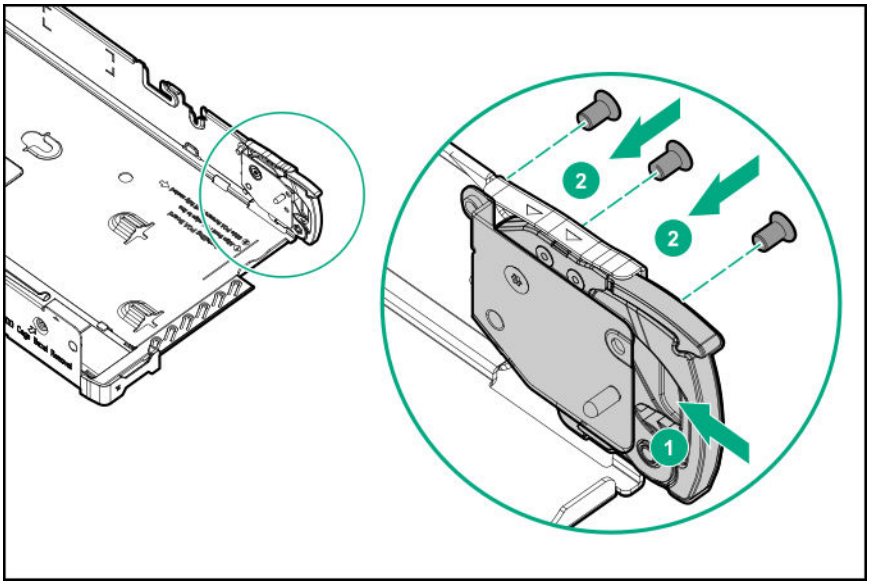

3. Extend the serial label pull tab.

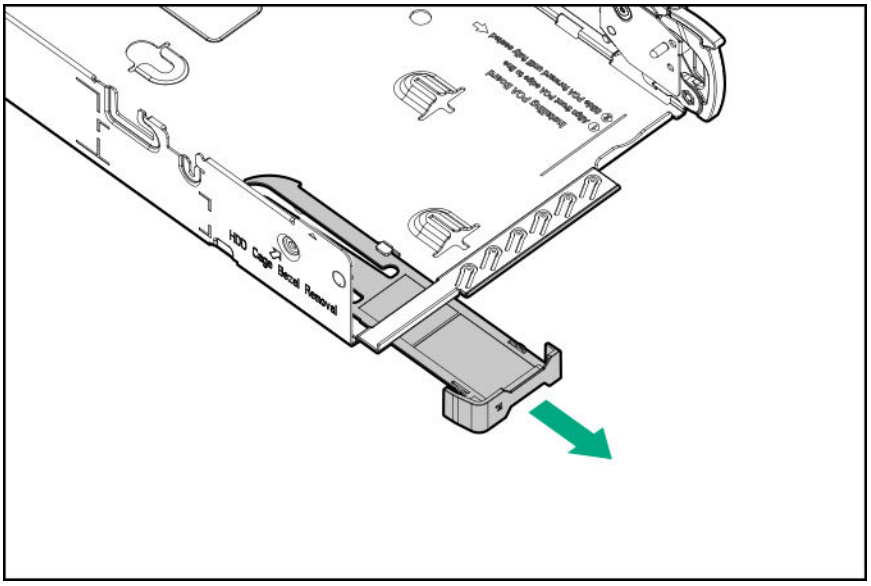

4. Align the system board, and then slide it into place inside the base pan.

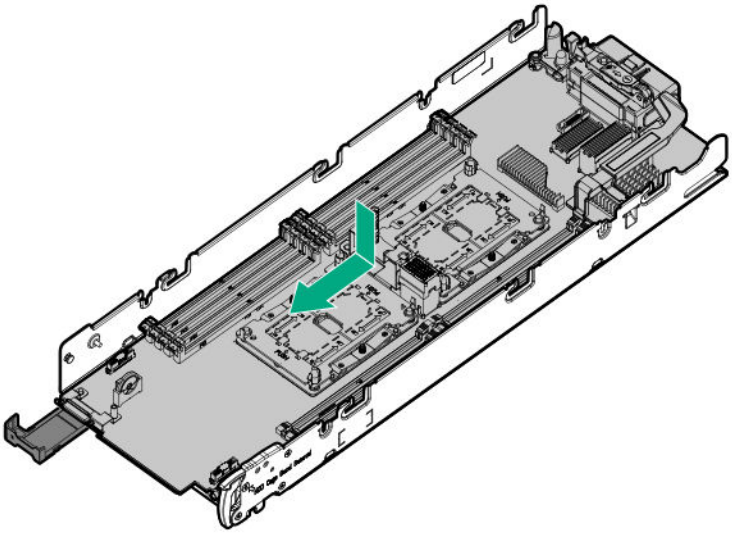

5. Slide the serial label pull tab back into the closed position.

6. While holding the system board in place, turn the base pan on the side and install the two screws on the bottom of the base pan.

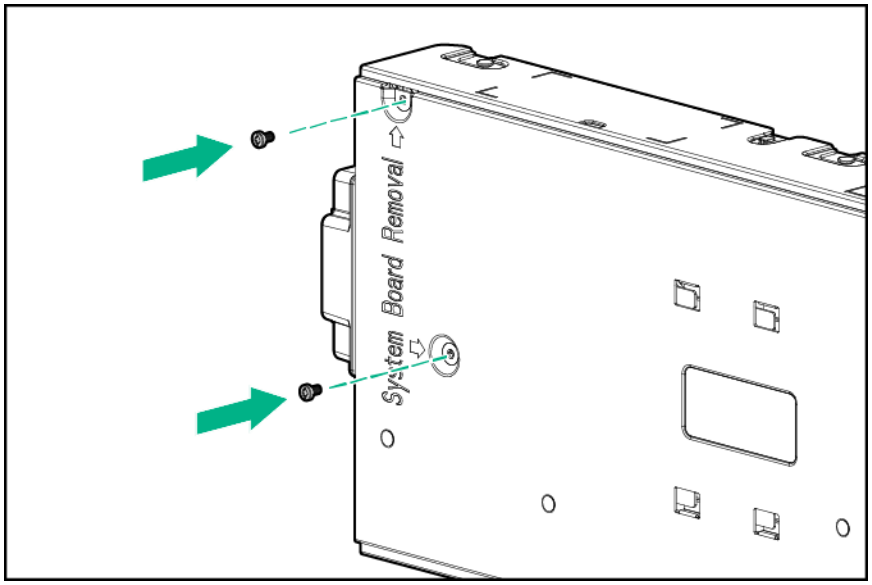

7. Place the server blade on a flat, level work surface.

   IMPORTANT: Install all components in the same configuration before installing the server blade.

8. Install the front panel/drive cage assembly (**Removing and replacing the front panel/drive cage assembly**).
9. Install all DIMM baffles (**Removing the DIMM baffles**).
10. Install the internal USB drive.

    To locate the internal USB connector, see **System board components**.

11. Install the storage controller or NVMe pass-through board or connect the direct connect SATA cable (**Removing a storage controller or NVMe pass-through board**).
12. Install the mezzanine assembly (**Replacing the mezzanine assembly**).
13. Install the drives and drive blanks (**Removing and replacing the drive bay options**).
14. Install the access panel.
15. Install the server blade.
16. Power up the server blade.

More information

Power up the server blade
Replacing the access panel
Install the server blade

Removing and replacing the system board assembly

Removing the system board assembly

Procedure

1. Power down the server blade.
2. Remove the server blade.
3. Place the server blade on a flat, level work surface.
4. Remove the access panel.
5. Remove all drives and drive blanks (**Removing and replacing the drive bay options**).

   IMPORTANT: When removing a DIMM baffle, do not remove the following options when installed on the DIMM baffle:

   - M.2 enablement option (left DIMM baffle)
   - HPE Smart Storage Battery (right DIMM baffle)

   IMPORTANT: When removing the right DIMM baffle, use the blue pull tab to disconnect the HPE Smart Storage Battery cable from the system board.

6. Remove both DIMM baffles (**Removing the DIMM baffles**).
7. Remove the DIMMs (**Removing and replacing a DIMM**).
8. Observe **NVDIMM relocation guidelines**
9. Remove all NVDIMMs (**Removing and replacing an NVDIMM**).
10. Remove the direct connect SATA cable (**Removing and replacing the direct connect SATA cable**).
11. Remove the internal USB drive, if installed.
    To locate the internal USB connector, see **System board components**.
12. Remove the storage controller or the NVMe pass-through board (**Removing a storage controller or NVMe pass-through board**).
13. Remove the front panel/drive cage assembly (**Removing and replacing the front panel/drive cage assembly**).
14. Remove the mezzanine assembly (**Removing the mezzanine assembly**).
15. Remove the FlexibleLOM adapter (**Removing and replacing the FlexibleLOM adapter**).
16. Remove the system battery (**Removing and replacing the system battery**).
17. Remove the heatsink blank (**Removing and replacing the heatsink blank**), if installed.

When all components are removed from the system board assembly, install all components on the spare system board assembly. See **Replacing the system board assembly**.

More information

Power down the server blade
Remove the server blade
Removing the access panel

Replacing the system board assembly

Procedure

1. Place the replacement system board assembly on a flat, level work surface.
2. If removed, install the heatsink blank (**Removing and replacing the heatsink blank**).
3. Install the system battery (**Removing and replacing the system battery**).
4. Install the FlexibleLOM adapter (**Removing and replacing the FlexibleLOM adapter**).
5. Install the mezzanine assembly (**Replacing the mezzanine assembly**).
6. Install the front panel/drive cage assembly (**Removing and replacing the front panel/drive cage assembly**).
7. Install the storage controller or the NVMe pass-through board (**Removing a storage controller or NVMe pass-through board**
8. If removed, install the internal USB drive.
   To locate the internal USB connector, see **System board components**.
9. Install the direct connect SATA cable (**Removing and replacing the direct connect SATA cable**).
10. Install the DIMMs (**Removing and replacing a DIMM**).
11. If removed from the left DIMM baffle, install the M.2 enablement option on the left DIMM baffle (**Replacing the M.2 enablement option**).
12. If removed from the right DIMM baffle, install the HPE Smart storage battery (**Replacing the HPE Smart Storage Battery**).
13. Install both DIMM baffles (**Removing the DIMM baffles**).
14. Install all drives and drive blanks (**Removing and replacing the drive bay options**).
15. Install the access panel.
16. Install the server blade.
17. Power up the server blade.
18. Re-enter the server serial number and product ID (**Re-entering the server serial number and product ID**).

More information

Power up the server blade
Replacing the access panel
Install the server blade

Re-entering the server serial number and product ID

After you replace the system board, the server blade serial number and the product ID must be configured:

Procedure

1. Access System Utilities. During POST, press **F9**.
2. On the System Utilities home screen, select **System Configuration** > **BIOS/Platform Configuration (RBSU)** > **Advanced Options** > **Advanced Service Options**.
3. Select the Serial Number field and press **Enter**.

The following alert appears:

```
The serial number is modified by qualified service personnel and must match
the serial number located on the chassis.
```

4. Click **OK**.
5. Type the serial number and press **Enter**.
6. Select the Product ID field and press **Enter**.

   The following alert appears:

   ```
   Product ID is modified only by qualified personnel. This value must match
   the product ID located on the chassis.
   ```

7. Type the product ID and press **Enter**.
8. Press **F10** to save the configuration.

The procedure is complete.

HPE Trusted Platform Module 2.0 Gen10 Option

The HPE Trusted Platform Module 2.0 Gen10 Option is not a customer-removable part.

CAUTION: If the TPM is removed from the original server blade and powered up on a different server blade, data stored in the TPM including keys will be erased.

If you suspect a TPM board failure, leave the TPM installed and remove the system board. Contact a Hewlett Packard Enterprise authorized service provider for a replacement system board and TPM board.

Troubleshooting

Troubleshooting resources

Troubleshooting resources are available for HPE Gen10 and Gen10 Plus server products in the following documents:

- *Troubleshooting Guide for HPE ProLiant Gen10 and Gen10 Plus servers* provides procedures for resolving common problems and comprehensive courses of action for fault isolation and identification, issue resolution, and software maintenance.
- *Error Message Guide for HPE ProLiant Gen10 servers and HPE Synergy* provides a list of error messages and information to assist with interpreting and resolving error messages.
- *Error Message Guide for HPE ProLiant Gen10 Plus servers and HPE Synergy* provides a list of error messages and information to assist with interpreting and resolving error messages.
- *Integrated Management Log Messages and Troubleshooting Guide for HPE ProLiant Gen10 and Gen10 Plus servers and HPE Synergy* provides IML messages and associated troubleshooting information to resolve critical and cautionary IML events.

To access troubleshooting resources for your product, see the Hewlett Packard Enterprise Information Library:

- For Gen10 servers, see **https://www.hpe.com/info/gen10-troubleshooting**.
- For Gen10 Plus servers, see **https://www.hpe.com/info/gen10plus-troubleshooting**.

Diagnostic tools

Product QuickSpecs

For more information about product features, specifications, options, configurations, and compatibility, see the product QuickSpecs on the Hewlett Packard Enterprise website (**https://www.hpe.com/info/qs**).

UEFI System Utilities

The UEFI System Utilities is embedded in the system ROM. Its features enable you to perform a wide range of configuration activities, including:

- Configuring system devices and installed options.
- Enabling and disabling system features.
- Displaying system information.
- Selecting the primary boot controller or partition.
- Configuring memory options.
- Launching other preboot environments.

HPE servers with UEFI can provide:

- Support for boot partitions larger than 2.2 TB. Such configurations could previously only be used for boot drives when using RAID solutions.
- Secure Boot that enables the system firmware, option card firmware, operating systems, and software collaborate to enhance platform security.
- UEFI Graphical User Interface (GUI)
- An Embedded UEFI Shell that provides a preboot environment for running scripts and tools.
- Boot support for option cards that only support a UEFI option ROM.

Selecting the boot mode

This server provides two **Boot Mode** configurations: UEFI Mode and Legacy BIOS Mode. Certain boot options require that you select a specific boot mode. By default, the boot mode is set to **UEFI Mode**. The system must boot in **UEFI Mode** to use certain options, including:

- Secure Boot, UEFI Optimized Boot, Generic USB Boot, IPv6 PXE Boot, iSCSI Boot, and Boot from URL
- Fibre Channel/FCoE Scan Policy

NOTE: The boot mode you use must match the operating system installation. If not, changing the boot mode can impact the ability of the server to boot to the installed operating system.

Prerequisite

When booting to **UEFI Mode**, leave **UEFI Optimized Boot** enabled.

Procedure

1. From the **System Utilities** screen, select **System Configuration** > **BIOS/Platform Configuration (RBSU)** > **Boot Options** > **Boot Mode**.
2. Select a setting.
   - **UEFI Mode** (default)—Configures the system to boot to a UEFI compatible operating system.
   - **Legacy BIOS Mode**—Configures the system to boot to a traditional operating system in Legacy BIOS compatibility mode.
3. Save your setting.
4. Reboot the server.

Secure Boot

Secure Boot is a server security feature that is implemented in the BIOS and does not require special hardware. Secure Boot ensures that each component launched during the boot process is digitally signed and that the signature is validated against a set of trusted certificates embedded in the UEFI BIOS. Secure Boot validates the software identity of the following components in the boot process:

- UEFI drivers loaded from PCIe cards
- UEFI drivers loaded from mass storage devices
- Preboot UEFI Shell applications
- OS UEFI boot loaders

When Secure Boot is enabled:

- Firmware components and operating systems with boot loaders must have an appropriate digital signature to execute during the boot process.
- Operating systems must support Secure Boot and have an EFI boot loader signed with one of the authorized keys to boot. For more information about supported operating systems, see **https://www.hpe.com/servers/ossupport**.

You can customize the certificates embedded in the UEFI BIOS by adding or removing your own certificates, either from a management console directly attached to the server, or by remotely connecting to the server using the iLO Remote Console.

You can configure Secure Boot:

- Using the **System Utilities** options described in the following sections.
- Using the iLO RESTful API to clear and restore certificates. For more information, see the Hewlett Packard Enterprise website (**https://www.hpe.com/info/redfish**).
- Using the `secboot` command in the Embedded UEFI Shell to display Secure Boot databases, keys, and security reports.

Launching the Embedded UEFI Shell

Use the **Embedded UEFI Shell** option to launch the Embedded UEFI Shell. The Embedded UEFI Shell is a preboot command-line environment for scripting and running UEFI applications, including UEFI boot loaders. The Shell also provides CLI-based commands you can use to obtain system information, and to configure and update the system BIOS.

Prerequisites

Embedded UEFI Shell is set to **Enabled**.

Procedure

1. From the **System Utilities** screen, select **Embedded Applications** > **Embedded UEFI Shell**.

   The **Embedded UEFI Shell** screen appears.

2. Press any key to acknowledge that you are physically present.

   This step ensures that certain features, such as disabling **Secure Boot** or managing the **Secure Boot** certificates using third-party UEFI tools, are not restricted.

3. If an administrator password is set, enter it at the prompt and press **Enter**.

   The `Shell>` prompt appears.

4. Enter the commands required to complete your task.

5. Enter the `exit` command to exit the Shell.

Intelligent Provisioning

Intelligent Provisioning is a single-server deployment tool embedded in ProLiant servers and HPE Synergy compute modules. Intelligent Provisioning simplifies server setup, providing a reliable and consistent way to deploy servers.

Intelligent Provisioning 3.30 and later includes HPE Rapid Setup Software. When you launch F10 mode from the POST screen, you are prompted to select whether you want to enter the Intelligent Provisioning or HPE Rapid Setup Software mode.

NOTE: After you have selected a mode, you must reprovision the server to change the mode that launches when you boot to F10.

Intelligent Provisioning prepares the system for installing original, licensed vendor media and Hewlett Packard Enterprise-branded versions of OS software. Intelligent Provisioning also prepares the system to integrate optimized server support software from the Service Pack for ProLiant (SPP). SPP is a comprehensive systems software and firmware solution for ProLiant servers, server blades, their enclosures, and HPE Synergy compute modules. These components are preloaded with a basic set of firmware and OS components that are installed along with Intelligent Provisioning.

IMPORTANT: HPE ProLiant DX/XL servers do not support operating system installation with Intelligent Provisioning, but they do support the maintenance features. For more information, see "Performing Maintenance" in the Intelligent Provisioning user guide and online help.

After the server is running, you can update the firmware to install additional components. You can also update any components that have been outdated since the server was manufactured.

To access Intelligent Provisioning:

- Press **F10** from the POST screen and enter either Intelligent Provisioning or HPE Rapid Setup Software.
- From the iLO web interface using **Always On**. **Always On** allows you to access Intelligent Provisioning without rebooting your server.

HPE Insight Remote Support

Hewlett Packard Enterprise strongly recommends that you register your device for remote support to enable enhanced delivery of your Hewlett Packard Enterprise warranty, HPE support services, or Hewlett Packard Enterprise contractual support agreement. Insight Remote Support supplements your monitoring continuously to ensure maximum system availability by providing intelligent event diagnosis, and automatic, secure submission of hardware event notifications to Hewlett Packard Enterprise, which will initiate a fast and accurate resolution, based on your product's service level. Notifications can be sent to your authorized Hewlett Packard Enterprise Channel Partner for onsite service, if configured and available in your country.

For more information, see *Insight Remote Support and Insight Online Setup Guide for ProLiant Servers and BladeSystem c-Class Enclosures* on the **Hewlett Packard Enterprise website**. Insight Remote Support is available as part of Hewlett Packard Enterprise Warranty, HPE support services, or Hewlett Packard Enterprise contractual support agreement.

HPE InfoSight for servers

The HPE InfoSight portal is a secure web interface hosted by HPE that allows you to monitor supported devices through a graphical interface.

HPE InfoSight for servers:

- Combines the machine learning and predictive analytics of HPE InfoSight with the health and performance monitoring of Active Health System (AHS) and HPE iLO to optimize performance and predict and prevent problems
- Provides automatic collection and analysis of the sensor and telemetry data from AHS to derive insights from the behaviors of the install base to provide recommendations to resolve problems and improve performance

For more information on getting started and using HPE InfoSight for servers, go to: **https://www.hpe.com/info/infosight-servers-docs**.

USB support

Hewlett Packard Enterprise Gen10 and Gen10 Plus server blades support all USB operating speeds depending on the device that is connected to the server blade.

External USB functionality

Hewlett Packard Enterprise provides external USB support to enable local connection of USB devices for server blade administration, configuration, and diagnostic procedures.

For additional security, external USB functionality can be disabled through USB options in UEFI System Utilities.

HPE Smart Storage Administrator

HPE SSA is the main tool for configuring arrays on HPE Smart Array SR controllers. It exists in three interface formats: the HPE SSA GUI, the HPE SSA CLI, and HPE SSA Scripting. All formats provide support for configuration tasks. Some of the advanced tasks are available in only one format.

The diagnostic features in HPE SSA are also available in the standalone software HPE Smart Storage Administrator Diagnostics Utility CLI.

During the initial provisioning of the server or compute module, an array is required to be configured before the operating system can be installed. You can configure the array using SSA.

HPE SSA is accessible both offline (either through HPE Intelligent Provisioning or as a standalone bootable ISO image) and online:

- Accessing HPE SSA in the offline environment

  IMPORTANT: If you are updating an existing server blade in an offline environment, obtain the latest version of HPE SSA through Service Pack for ProLiant before performing configuration procedures.

  Using one of multiple methods, you can run HPE SSA before launching the host operating system. In offline mode, users can configure or maintain detected and supported devices, such as optional Smart Array controllers and integrated Smart Array controllers. Some HPE SSA features are only available in the offline environment, such as setting the boot controller and boot volume.

- Accessing HPE SSA in the online environment

  This method requires an administrator to download the HPE SSA executables and install them. You can run HPE SSA online after launching the host operating system.

For more information, see *HPE Smart Array SR Gen10 Configuration Guide* at the **Hewlett Packard Enterprise website**.

Component identification

Front panel components

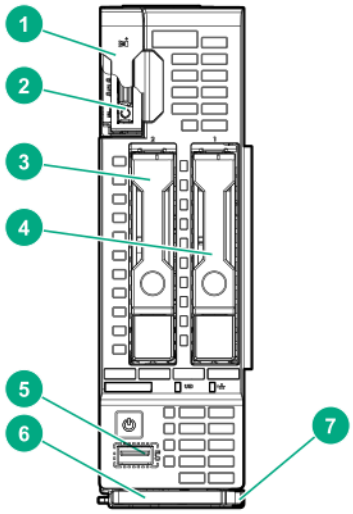

Item	Description
1	Serial label pull tab
2	HPE c-Class Blade SUV connector[1] (behind the serial label pull tab)
3	Drive bay 2
4	Drive bay 1
5	iLO Service port
6	Server blade release lever
7	Server blade release latch

[1] The SUV connector and the c-Class Blade SUV Cable are used for some server blade configuration and diagnostic procedures.

Front panel LEDs and buttons

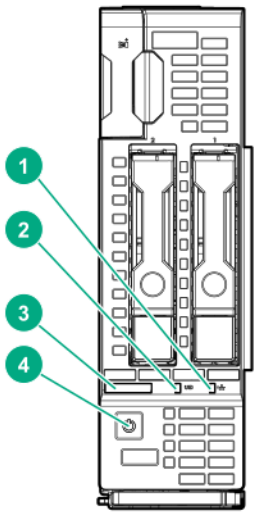

Item	Description	Status
1	NIC status LED	Solid green = Link to network Flashing green (1 flash per second) = Network active Off = No network activity
2	UID LED	Solid blue = Activated Flashing blue: • 1 flash per second = Remote management or firmware upgrade in progress • 4 flashes per second = iLO manual reboot sequence initiated • 8 flashes per second = iLO manual reboot sequence in progress Off = Deactivated

Table Continued

Item	Description	Status
3	Health LED	Solid green = Normal Flashing green (1 flash per second) = iLO is rebooting Flashing amber = System degraded Flashing red (1 flash per second) = System critical If the health LED indicates a degraded or critical state, review the system IML or use iLO to review the system health status.
4	Power On/Standby button and system power LED	Solid green = System on Flashing green (1 flash per second) = Performing power on sequence Solid amber = System in standby Off = No power present Facility power is not present, power cord is not attached, no power supplies are installed, power supply failure has occurred, or the server blade is not plugged in.

Front panel LED power fault codes

The number of flashes in each sequence corresponds to the subsystem impacted by the power fault. The following table provides a list of power fault codes, and the subsystems that are affected. Not all power faults are used by all Server Blades.

Subsystem	Front panel LED behavior
System board	1 flash
Processor	2 flashes
Memory	3 flashes
Mezzanine slots	4 flashes
FlexibleLOM	5 flashes
Removable HPE Flexible Smart Array controller/NVMe Pass-Through	6 flashes
Power backplane or storage backplane	8 flashes

Serial label pull tab information

The serial label pull tab is on the front panel of the server blade. To locate the serial label pull tab, see **Front panel components**. The serial label pull tab provides the following information:

- Product serial number
- iLO information
- QR code that points to mobile-friendly documentation

Drive numbering

Depending on the configuration, this server blade can support hard drives, SSDs, NVMe SSDs, and uFF drives (supported in a SFF Flash Adapter) in the drive bays. Depending on the device installed, the bay number might be different.

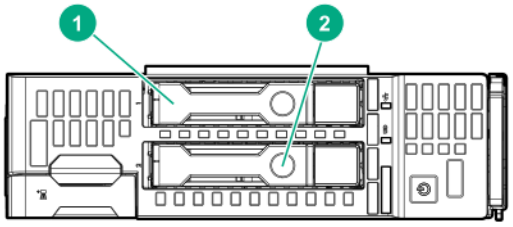

Item	Hard drive/SSD bay numbering	uFF drive bay numbering	NVMe drive bay numbering
1	1	1 and 101	1
2	2	2 and 102	2

Hot-plug drive LED definitions

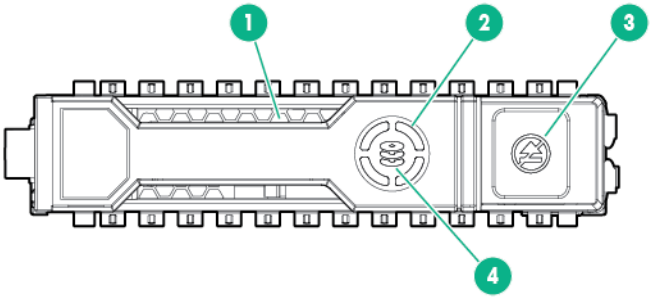

Item	LED	Status	Definition
1	Locate	Solid blue	The drive is being identified by a host application.
		Flashing blue	The drive carrier firmware is being updated or requires an update.
2	Activity ring	Rotating green	Drive activity
		Off	No drive activity
3	Do not remove	Solid white	Do not remove the drive. Removing the drive causes one or more of the logical drives to fail.
		Off	Removing the drive does not cause a logical drive to fail.
4	Drive status	Solid green	The drive is a member of one or more logical drives.

Table Continued

Item	LED	Status	Definition
		Flashing green	The drive is doing one of the following: • Rebuilding • Performing a RAID migration • Performing a strip size migration • Performing a capacity expansion • Performing a logical drive extension • Erasing • Spare part activation
		Flashing amber/ green	The drive is a member of one or more logical drives and predicts the drive will fail.
		Flashing amber	The drive is not configured and predicts the drive will fail.
		Solid amber	The drive has failed.
		Off	The drive is not configured by a RAID controller or a spare drive.

NVMe SSD components

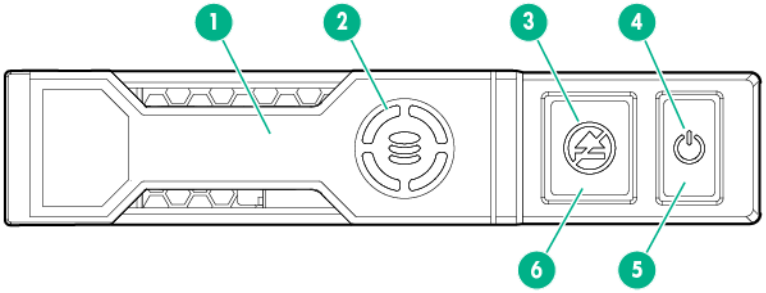

Item	Component	Status	Definition
1	Release lever	—	Ejects the NVMe drive carrier from the cage.
2	Activity ring LED	Rotating green	Drive activity
		Off	No drive activity
3	Do Not Remove LED	Solid white	Drive is powered on and configured in system. Do not remove the drive.
		Flashing white	Ejection request pending. Do not remove the drive.

Table Continued

Item	Component	Status	Definition
		Off	Drive removed from the PCIe bus and can be ejected.
4	Power LED	Solid green	Drive is powered on and configured in system. Do not remove the drive.
		Flashing green	Ejection request pending. Do not remove the drive.
		Off	Drive removed from the PCIe bus and can be ejected.
5	Power button	—	Momentary press to request drive removal from PCIe bus and ejection. Drive removal request can be denied by operating system.
6	Do Not Remove button	—	Releases the release lever for removal and insertion.

Upon NVMe SSD insertion, an LED initiation sequence will be visible - lighting each LED in the carrier in sequence from left to right. The sequence will cycle until the drive is recognized by the system. When the SSD is recognized by the system - the Do Not Remove LED will be solid white and the Power LED will be solid green.

SFF flash adapter components and LED definitions

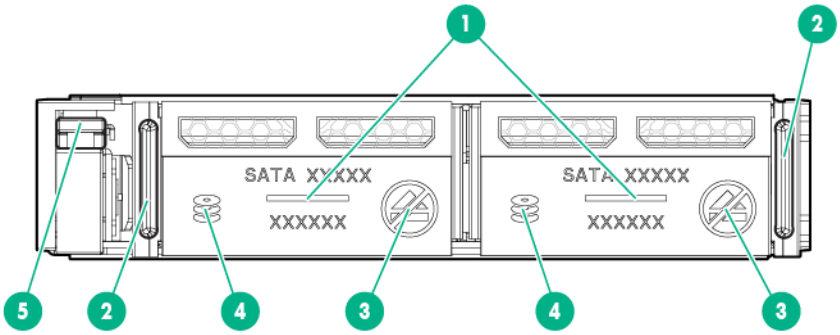

Item	Component	Description
1	Locate	• Off—Normal • Solid blue—The drive is being identified by a host application. • Flashing blue—The drive firmware is being updated or requires an update.
2	uFF drive ejection latch	Removes the uFF drive when released.

Table Continued

Item	Component	Description
3	Do not remove LED	• Off—OK to remove the drive. Removing the drive does not cause a logical drive to fail. • Solid white—Do not remove the drive. Removing the drive causes one or more of the logical drives to fail.
4	Drive status LED	• Off—The drive is not configured by a RAID controller or a spare drive. • Solid green—The drive is a member of one or more logical drives. • Flashing green (4 Hz)—The drive is operating normally and has activity. • Flashing green (1 Hz)—The drive is rebuilding, erasing, or performing a RAID migration, stripe size migration, capacity expansion, logical drive extension, or spare activation. • Flashing amber/green (1 Hz)—The drive is a member of one or more logical drives that predicts the drive will fail. • Solid amber—The drive has failed. • Flashing amber (1 Hz)—The drive is not configured and predicts the drive will fail.
5	Adapter ejection release latch and handle	Removes the SFF flash adapter when released.

SUV cable connectors

CAUTION: Before disconnecting the SUV cable from the connector, always squeeze the release buttons on the sides of the connector. Failure to do so can result in damage to the equipment.

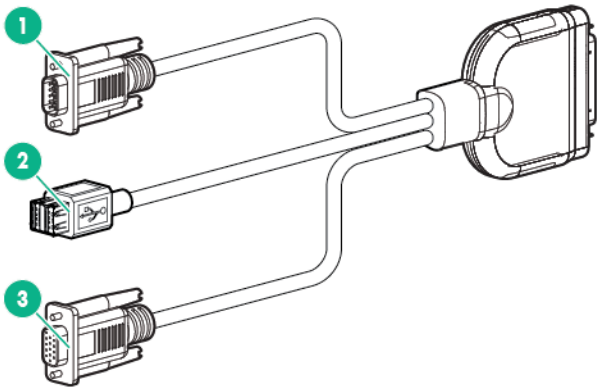

Item	Connector	Description
1	Serial	For trained personnel to connect a null modem serial cable and perform advanced diagnostic procedures
2	USB[1]	For connecting up to two USB 2.0 devices
3	Video	For connecting a video monitor

[1] The USB connectors on the SUV cable do not support devices that require greater than a 500mA power source.

System board components

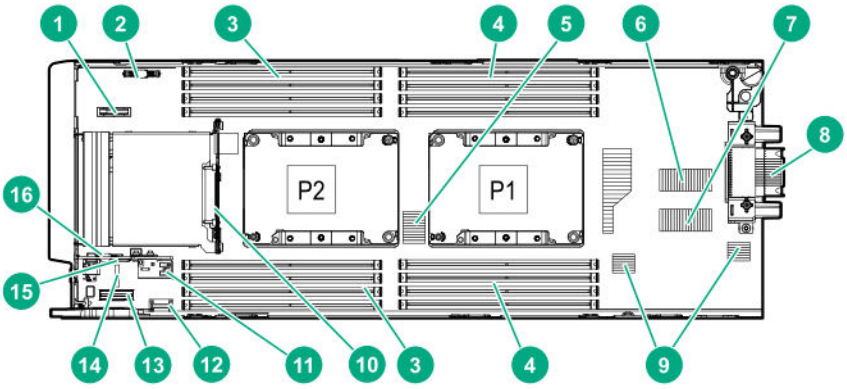

Item	Description
1	System battery
2	M.2 enablement option connector
3	Processor 2 DIMM slots (8)
4	Processor 1 DIMM slots (8)
5	Storage controller or NVMe pass-through board connector
6	Mezzanine connector 1 (Type A mezzanine only)
7	Mezzanine connector 2 (Type A or Type B mezzanine)
8	Enclosure connector
9	FlexibleLOM connectors (2)
10	SAS/SATA or NVMe backplane
11	Internal USB 3.0 connector
12	Energy pack connector
13	Direct-connect SATA connector
14	System maintenance switch
15	microSD card slot
16	TPM connector

System maintenance switch

Position	Default	Function
S1	Off	Off = iLO security is enabled. On = iLO security is disabled.
S2	Off	Off = System configuration can be changed. On = System configuration is locked.
S3	Off	Reserved
S4	Off	Reserved
S5	Off	Off = Power-on password is enabled. On = Power-on password is disabled.
S6	Off	Off = No function. On = ROM reads system configuration as invalid.
S7	Off	Reserved
S8	—	Reserved
S9	Off	Reserved
S10	—	Reserved
S11	—	Reserved
S12	—	Reserved

CAUTION: Clearing CMOS, NVRAM, or both deletes configuration information. Be sure to configure the server blade properly to prevent data loss.

DIMM slot locations

DIMM slots are numbered sequentially (1 through 8) for each processor and designate the DIMM slot ID for population rules and spare replacement.

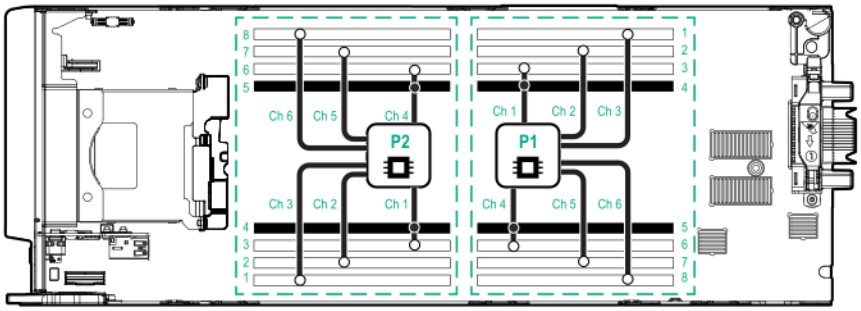

For specific DIMM population information, see the DIMM population guidelines on the Hewlett Packard Enterprise website (**http://www.hpe.com/docs/memory-population-rules**).

DIMM label identification

To determine DIMM characteristics, see the label attached to the DIMM. The information in this section helps you to use the label to locate specific information about the DIMM.

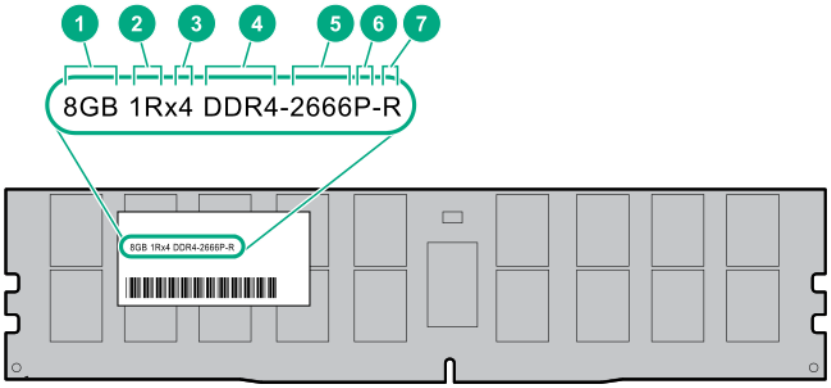

Item	Description	Example
1	Capacity	8 GB 16 GB 32 GB 64 GB 128 GB
2	Rank	1R = Single rank 2R = Dual rank 4R = Quad rank 8R = Octal rank
3	Data width on DRAM	x4 = 4-bit x8 = 8-bit x16 = 16-bit
4	Memory generation	PC4 = DDR4
5	Maximum memory speed	2133 MT/s 2400 MT/s 2666 MT/s 2933 MT/s

Table Continued

Item	Description	Example
6	CAS latency	P = CAS 15-15-15 T = CAS 17-17-17 U = CAS 20-18-18 V = CAS 19-19-19 (for RDIMM, LRDIMM) V = CAS 22-19-19 (for 3DS TSV LRDIMM) Y = CAS 21-21-21 (for RDIMM, LRDIMM) Y = CAS 24-21-21 (for 3DS TSV LRDIMM)
7	DIMM type	R = RDIMM (registered) L = LRDIMM (load reduced) E = Unbuffered ECC (UDIMM)

For more information about product features, specifications, options, configurations, and compatibility, see the HPE DDR4 SmartMemory QuickSpecs on the Hewlett Packard Enterprise website (**https://www.hpe.com/support/DDR4SmartMemoryQS**).

NVDIMM identification

NVDIMMs are supported only when first-generation Intel Xeon Scalable processors are installed on the server blade.

NVDIMM boards are blue instead of green. This change to the color makes it easier to distinguish NVDIMMs from DIMMs.

To determine NVDIMM characteristics, see the full product description as shown in the following example:

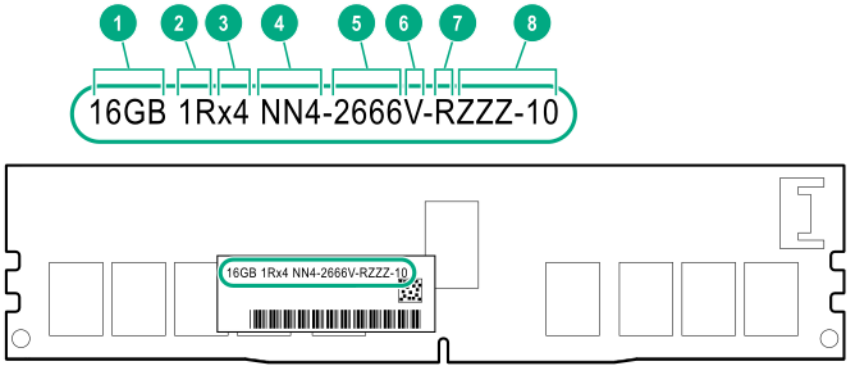

Item	Description	Definition
1	Capacity	16 GiB
2	Rank	1R (Single rank)
3	Data width per DRAM chip	x4 (4 bit)
4	Memory type	NN4=DDR4 NVDIMM-N
5	Maximum memory speed	2667 MT/s

Table Continued

Item	Description	Definition
6	Speed grade	V (latency 19-19-19)
7	DIMM type	RDIMM (registered)
8	Other	—

For more information about NVDIMMs, see the product QuickSpecs on the Hewlett Packard Enterprise website (**http://www.hpe.com/info/qs**).

NVDIMM 2D Data Matrix barcode

The 2D Data Matrix barcode is on the right side of the NVDIMM label and can be scanned by a cell phone or other device.

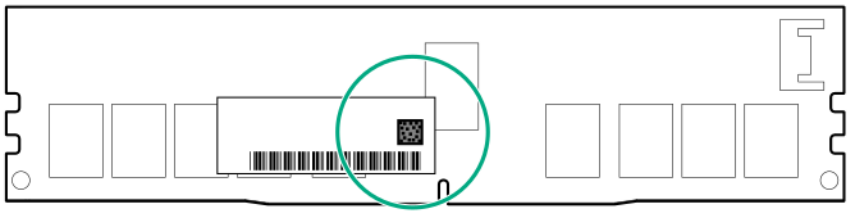

When scanned, the following information from the label can be copied to your cell phone or device:

- (P) is the module part number.
- (L) is the technical details shown on the label.
- (S) is the module serial number.

Example: (P)HMN82GR7AFR4N-VK (L)16GB 1Rx4 NN4-2666V-RZZZ-10(S)80AD-01-1742-11AED5C2

NVDIMM LED identification

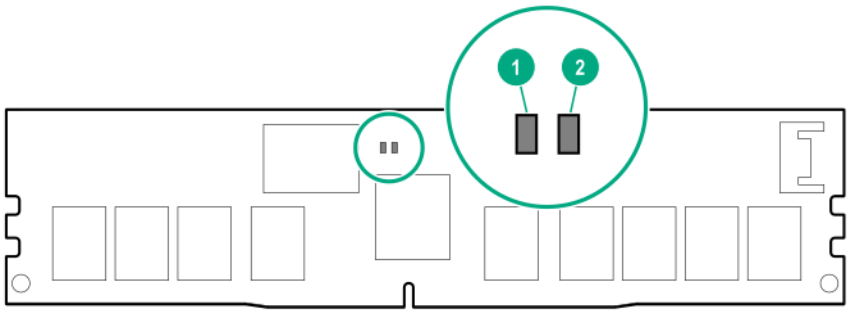

Item	LED description	LED color
1	Power LED	Green
2	Function LED	Blue

NVDIMM-N LED combinations

State	Definition	NVDIMM-N Power LED (green)	NVDIMM-N Function LED (blue)
0	AC power is on (12V rail) but the NVM controller is not working or not ready.	On	Off
1	AC power is on (12V rail) and the NVM controller is ready.	On	On
2	AC power is off or the battery is off (12V rail off).	Off	Off
3	AC power is on (12V rail) or the battery is on (12V rail) and the NVDIMM-N is active (backup and restore).	On	Flashing

NVDIMM Function LED patterns

For the purpose of this table, the NVDIMM-N LED operates as follows:

- Solid indicates that the LED remains in the on state.
- Flashing indicates that the LED is on for 2 seconds and off for 1 second.
- Fast-flashing indicates that the LED is on for 300 ms and off for 300 ms.

State	Definition	NVDIMM-N Function LED
0	The restore operation is in progress.	Flashing
1	The restore operation is successful.	Solid or On
2	Erase is in progress.	Flashing
3	The erase operation is successful.	Solid or On
4	The NVDIMM-N is armed, and the NVDIMM-N is in normal operation.	Solid or On
5	The save operation is in progress.	Flashing
6	The NVDIMM-N finished saving and battery is still turned on (12 V still powered).	Solid or On
7	The NVDIMM-N has an internal error or a firmware update is in progress. For more information about an NVDIMM-N internal error, see the IML.	Fast-flashing

Mezzanine connector definitions

Item	PCIe
Mezzanine connector 1	x16, Type A mezzanine card only
Mezzanine connector 2	x16, Type A or B mezzanine card

NOTE: When installing a mezzanine card option on mezzanine connector 2, processor 2 must be installed.

Mezzanine connector guide pin locations

The mezzanine assembly supports two mezzanine cards in this server blade. When installing a mezzanine card into the assembly, be sure to use the guide pins associated with the mezzanine connector.

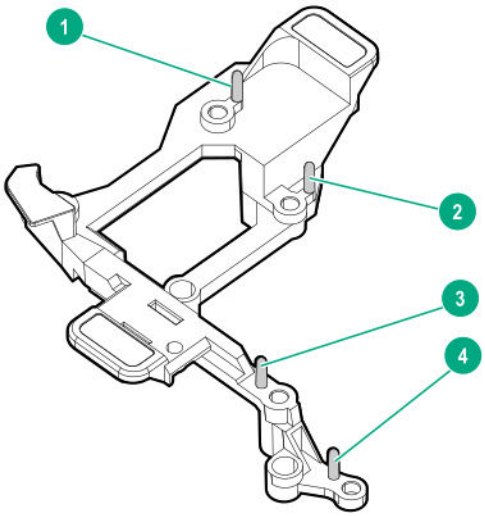

Item	Description
1 and 3	Mezzanine connector 2
2 and 4	Mezzanine connector 1

Cabling

Cabling resources

Cabling configurations and requirements vary depending on the product and installed options. For more information about product features, specifications, options, configurations, and compatibility, see the product QuickSpecs on the Hewlett Packard Enterprise website (**http://www.hpe.com/info/qs**).

HPE Smart Storage Battery cabling

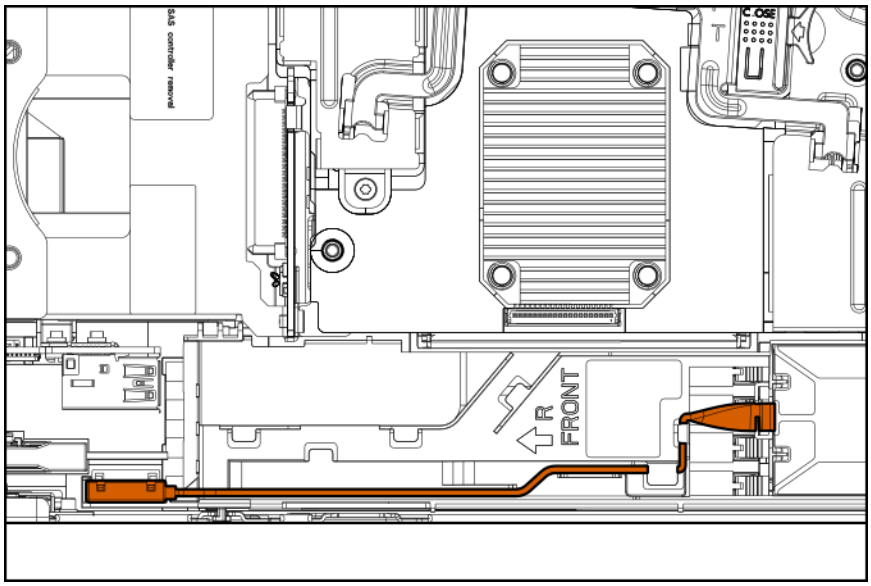

Direct connect SATA cabling

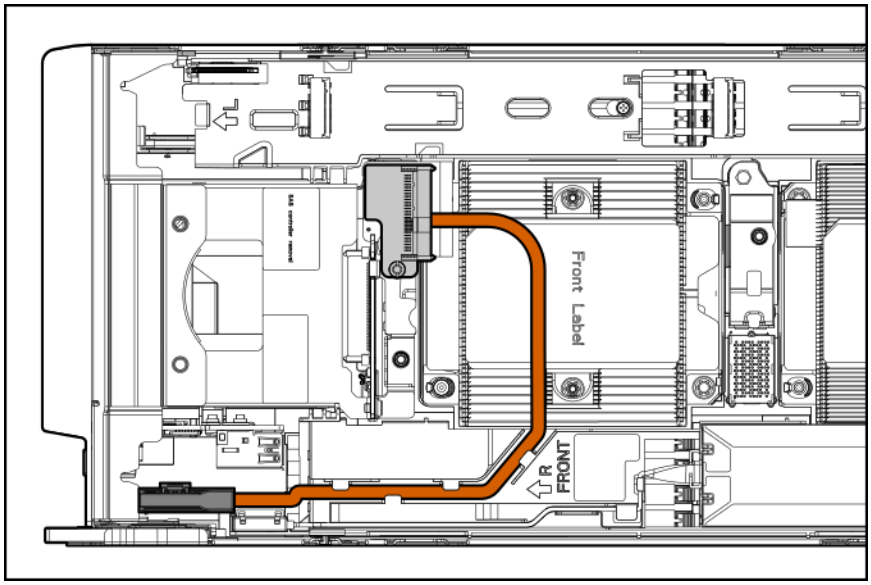

Using the HPE c-Class Blade SUV Cable

The c-Class Blade SUV Cable enables the user to perform server blade administration, configuration, and diagnostic procedures by connecting video and USB devices directly to the server blade. For SUV cable connectors, see "**SUV cable connectors**."

Disconnecting and replacing the SUV cable

CAUTION: Before disconnecting the SUV cable from the connector, always squeeze the release buttons on the sides of the connector. Failure to do so can result in damage to the equipment.

Procedure

1. Disconnect the SUV cable from the server blade.
   a. Press and hold both sides of the connector.
   b. Disconnect the cable from the server blade.

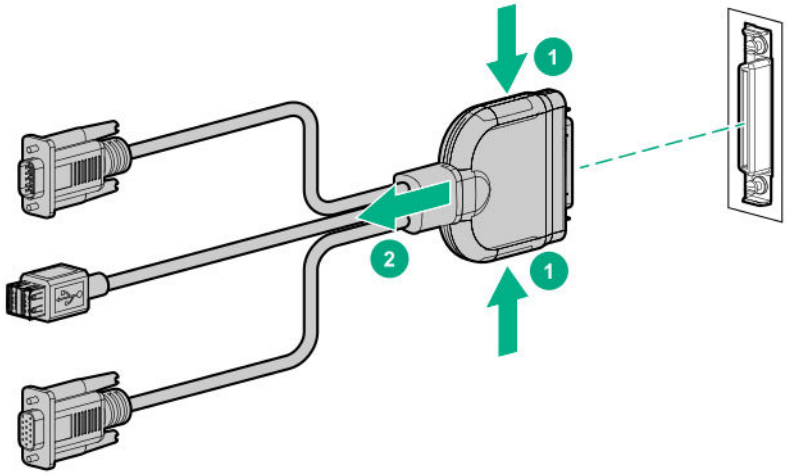

To replace the component, reverse the removal procedure.

Connecting locally to a server blade with video and USB devices

Use the SUV cable to connect a monitor and any of the following USB devices:

- USB hub
- USB keyboard
- USB mouse
- USB CD/DVD-ROM drive

The USB connectors on the SUV cable do not support devices that require greater than a 500mA power source.

Numerous configurations are possible. This section offers two possible configurations. For more information, see **USB support**.

Accessing a server blade with local KVM

Prerequisites

For this configuration, a USB hub is not necessary. To connect additional devices, use a USB hub.

CAUTION: Before disconnecting the SUV cable from the connector, always squeeze the release buttons on the sides of the connector. Failure to do so can result in damage to the equipment.

Procedure

1. Open the serial label pull tab and connect the c-Class Blade SUV Cable to the server blade.
2. Connect the video connector to a monitor.
3. Connect a USB mouse to one USB connector.
4. Connect a USB keyboard to the second USB connector.

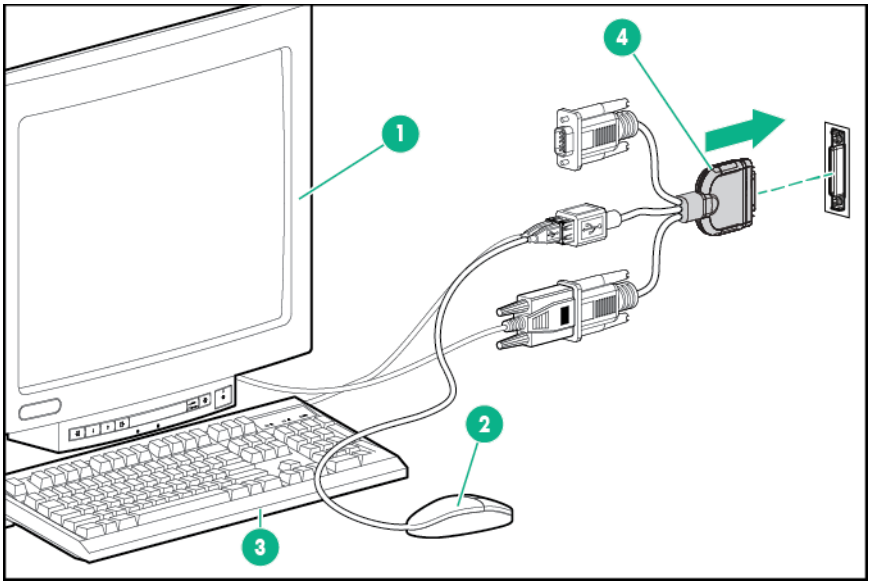

Item	Description
1	Monitor
2	USB mouse
3	USB keyboard
4	c-Class Blade SUV Cable

Accessing local media devices

Prerequisites

Use the following configuration when configuring a server blade or loading software updates and patches from a USB CD/DVD-ROM.

Use a USB hub when connecting a USB CD-ROM drive to the server blade. The USB connectors on the SUV cable do not support devices that require a power source greater than 500mA. The USB hub provides additional connections and the power required to support USB keys or external drives that require more than 500mA at 5V.

Procedure

1. Open the serial label pull tab and connect the c-Class Blade SUV cable to the server blade.
2. Connect the video connector to a monitor.
3. Connect a USB hub to one USB connector.
4. Connect the following to the USB hub:
   - USB CD/DVD-ROM drive
   - USB keyboard
   - USB mouse

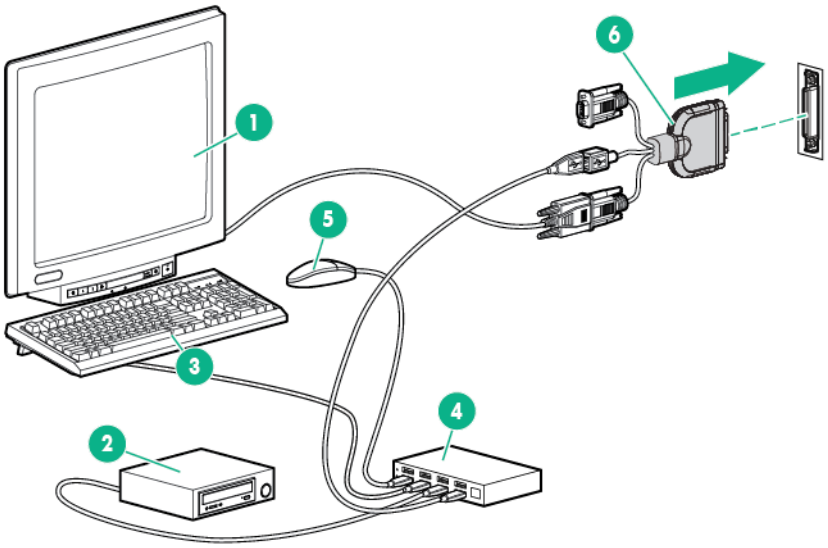

Item	Description
1	Monitor
2	USB CD/DVD-ROM drive
3	USB keyboard
4	USB hub
5	USB mouse
6	c-Class Blade SUV Cable

Specifications

Environmental specifications

Specification	Value
Temperature range[1]	—
Operating	10°C to 35°C (50°F to 95°F)
Nonoperating	-30°C to 60°C (-22°F to 140°F)
Relative humidity (noncondensing)[2]	—
Operating	10% to 90% @ 28°C (82.4°F)
Nonoperating	5% to 95% @ 38.7°C (101.7°F)
Altitude[3]	—
Operating	3,050 m (10,000 ft)
Nonoperating	9,144 m (30,000 ft)

[1] The following temperature conditions and limitations apply:

- All temperature ratings shown are for sea level.
- An altitude derating of 1°C per 304.8 m (1.8°F per 1,000 ft) up to 3,048 m (10,000 ft) applies.
- No direct sunlight is allowed.
- The maximum permissible rate of change is 10°C/hr (18°F/hr).
- The type and number of options installed might reduce the upper temperature and humidity limits.
- Operating with a fan fault or above 30°C (86°F) might reduce system performance.

[2] Storage maximum humidity of 95% is based on a maximum temperature of 45°C (113°F).

[3] Maximum storage altitude corresponds to a minimum pressure of 70 kPa (10.1 psia).

Server blade specifications

Specification	Value
Height	180.70 mm (7.11 in)
Depth	517.51mm (20.37 in)
Width	55.37 mm (2.18 in)
Weight (maximum)	6.33 kg (13.96 lb)
Weight (minimum)	4.50 kg (9.90 lb)

Support and other resources

Accessing Hewlett Packard Enterprise Support

- For live assistance, go to the Contact Hewlett Packard Enterprise Worldwide website:

  https://www.hpe.com/info/assistance

- To access documentation and support services, go to the Hewlett Packard Enterprise Support Center website:

  https://www.hpe.com/support/hpesc

Information to collect

- Technical support registration number (if applicable)
- Product name, model or version, and serial number
- Operating system name and version
- Firmware version
- Error messages
- Product-specific reports and logs
- Add-on products or components
- Third-party products or components

Accessing updates

- Some software products provide a mechanism for accessing software updates through the product interface. Review your product documentation to identify the recommended software update method.
- To download product updates:

  Hewlett Packard Enterprise Support Center

  https://www.hpe.com/support/hpesc

  Hewlett Packard Enterprise Support Center: Software downloads

  https://www.hpe.com/support/downloads

  My HPE Software Center

  https://www.hpe.com/software/hpesoftwarecenter

- To subscribe to eNewsletters and alerts:

  https://www.hpe.com/support/e-updates

- To view and update your entitlements, and to link your contracts and warranties with your profile, go to the Hewlett Packard Enterprise Support Center **More Information on Access to Support Materials** page:

  https://www.hpe.com/support/AccessToSupportMaterials

IMPORTANT: Access to some updates might require product entitlement when accessed through the Hewlett Packard Enterprise Support Center. You must have an HPE Passport set up with relevant entitlements.

Customer self repair

Hewlett Packard Enterprise customer self repair (CSR) programs allow you to repair your product. If a CSR part needs to be replaced, it will be shipped directly to you so that you can install it at your convenience. Some parts do not qualify for CSR. Your Hewlett Packard Enterprise authorized service provider will determine whether a repair can be accomplished by CSR.

For more information about CSR, contact your local service provider.

Remote support

Remote support is available with supported devices as part of your warranty or contractual support agreement. It provides intelligent event diagnosis, and automatic, secure submission of hardware event notifications to Hewlett Packard Enterprise, which will initiate a fast and accurate resolution based on your product's service level. Hewlett Packard Enterprise strongly recommends that you register your device for remote support.

If your product includes additional remote support details, use search to locate that information.

Remote support and Proactive Care information

HPE Get Connected

https://www.hpe.com/services/getconnected

HPE Proactive Care services

https://www.hpe.com/services/proactivecare

HPE Datacenter Care services

https://www.hpe.com/services/datacentercare

HPE Proactive Care service: Supported products list

https://www.hpe.com/services/proactivecaresupportedproducts

HPE Proactive Care advanced service: Supported products list

https://www.hpe.com/services/proactivecareadvancedsupportedproducts

Proactive Care customer information

Proactive Care central

https://www.hpe.com/services/proactivecarecentral

Proactive Care service activation

https://www.hpe.com/services/proactivecarecentralgetstarted

Warranty information

To view the warranty information for your product, see the links provided below:

HPE ProLiant and IA-32 Servers and Options

https://www.hpe.com/support/ProLiantServers-Warranties

HPE Enterprise and Cloudline Servers

https://www.hpe.com/support/EnterpriseServers-Warranties

HPE Storage Products

https://www.hpe.com/support/Storage-Warranties

HPE Networking Products

https://www.hpe.com/support/Networking-Warranties

Regulatory information

To view the regulatory information for your product, view the *Safety and Compliance Information for Server, Storage, Power, Networking, and Rack Products*, available at the Hewlett Packard Enterprise Support Center:

https://www.hpe.com/support/Safety-Compliance-EnterpriseProducts

Additional regulatory information

Hewlett Packard Enterprise is committed to providing our customers with information about the chemical substances in our products as needed to comply with legal requirements such as REACH (Regulation EC No 1907/2006 of the European Parliament and the Council). A chemical information report for this product can be found at:

https://www.hpe.com/info/reach

For Hewlett Packard Enterprise product environmental and safety information and compliance data, including RoHS and REACH, see:

https://www.hpe.com/info/ecodata

For Hewlett Packard Enterprise environmental information, including company programs, product recycling, and energy efficiency, see:

https://www.hpe.com/info/environment

Documentation feedback

Hewlett Packard Enterprise is committed to providing documentation that meets your needs. To help us improve the documentation, send any errors, suggestions, or comments to Documentation Feedback (**docsfeedback@hpe.com**). When submitting your feedback, include the document title, part number, edition, and publication date located on the front cover of the document. For online help content, include the product name, product version, help edition, and publication date located on the legal notices page.