delta

Funimal **Shelf**

Assembly instructions

Parts

- **A** x1 — Shelf
- **B** x2 — Funimal Bracket
- **C** x4 — Short Screw
- **D** x4 — Long Screw

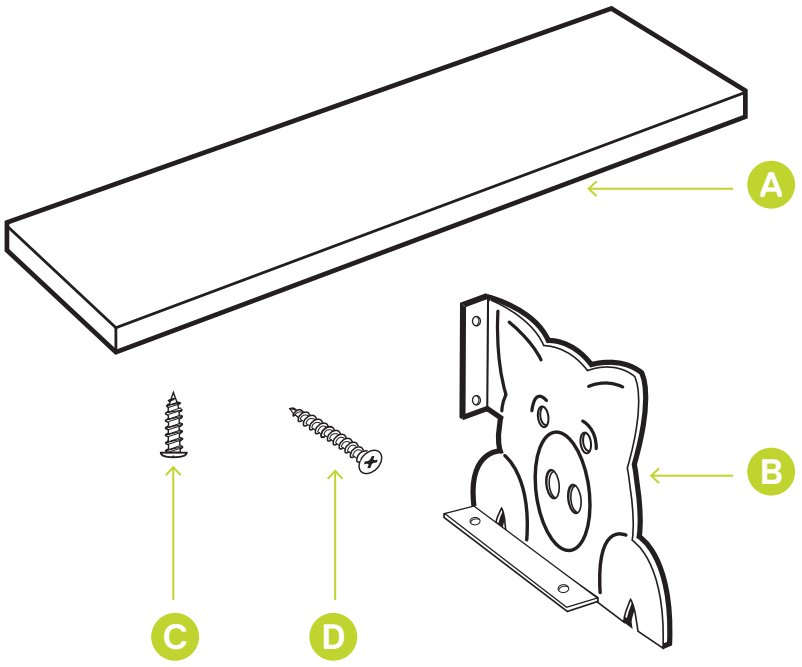

Tools Required

Phillips Head Screwdriver

Hand Drill 1/8"(3mm)

Spirit Level

Tape Measure

Way of locating studs within the wall (see hardware store for advice)

1. Place bookend brackets perpendicular to shelf and mark location for holes. Drill short pilot holes in shelf. (no more than 3/8" deep, 9mm)
2. Secure right & left bookend brackets to shelf using short screws C (.5")
3. Locate two studs behind wall at desired location for shelf. The studs will be 32" apart. NOTE: This product requires stud distances of 16" and wooden studs. For any other construction, please contact a hardware store for suitable attachment hardware.
4. While one person holds shelf in place, second person marks position of holes at stud locations found in step 3. Use spirit level to ensure shelf is horizontal.
5. Drill 1/8" (3mm) pilot holes at 90º to wall and then attach brackets to wall using long screws D (1.5").

IMPORTANT SAFETY NOTE
Beware of drilling into electrical wire or pipes within wall!

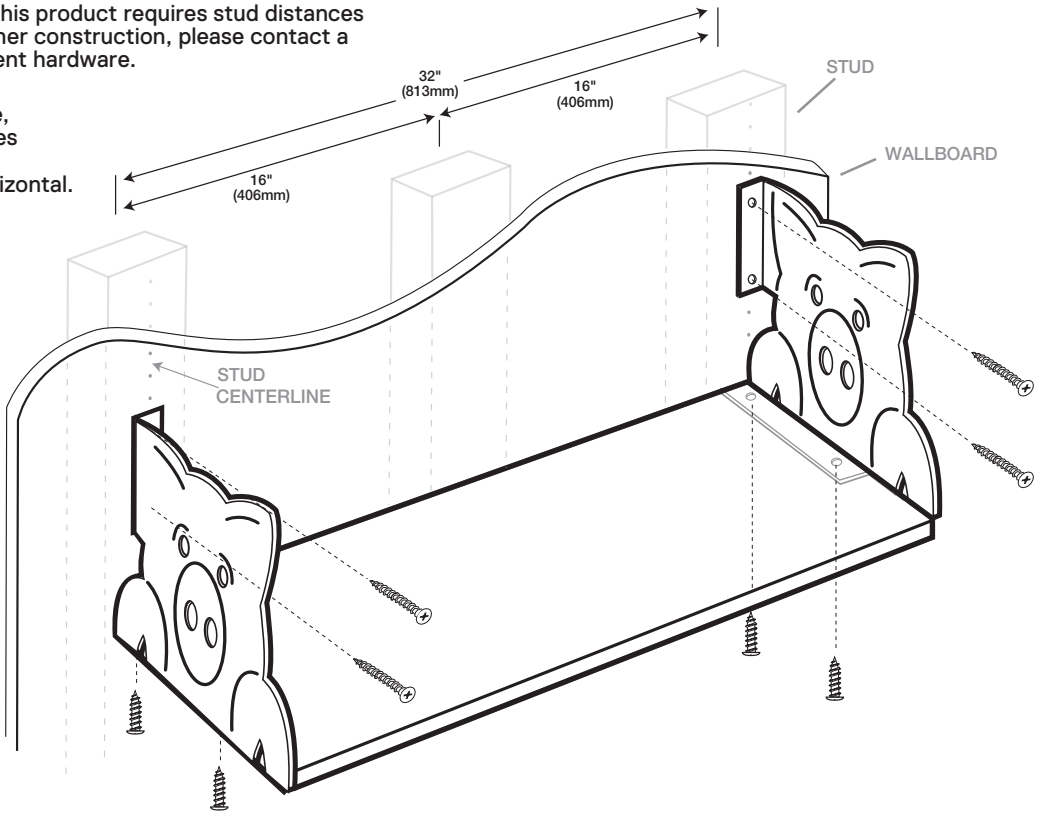

WARNING
Do not allow children to play or hang from shelf
Maximum weight on properly installed shelf is 44lbs, 20 KGS evenly distributed.