mountain buggy®

life without limit™

carrycot plus™ for swift™ and MB mini

instructions

IMPORTANT:

This document contains instructions and must be kept for future reference.

Please read thoroughly before use.

please register your product purchase through our online warranty registration

mountainbuggy.com/register

care information

if your product is damaged in any way, or you're not sure how to use it, please consult our web support team (mountainbuggy.com/support).

caring for carrycot plus™

- fabrics can be sponge cleaned with warm water, using a mild natural soap.
- the carrycot™ mattress may be hand washed in warm water with mild natural soap.
- do not use any solvents or bleach based products as these may harm the materials.
- dry your carrycot plus™ thoroughly before storage. store in a well ventilated space, away from direct sunlight which could damage or fade your carrycot's colourful coat.

important information

- when used in lie-flat or recline modes the carrycot plus™ should be used for one child to a maximum weight of 9kg.
- when used in parent facing seat mode, the carrycot plus™ should be used for one child to a maximum of 15kg.
- Mountain Buggy carrycot plus™ for swift™ and MB mini is compatible with the swift™ and MB mini buggies only.

visit **mountainbuggy.com/support**

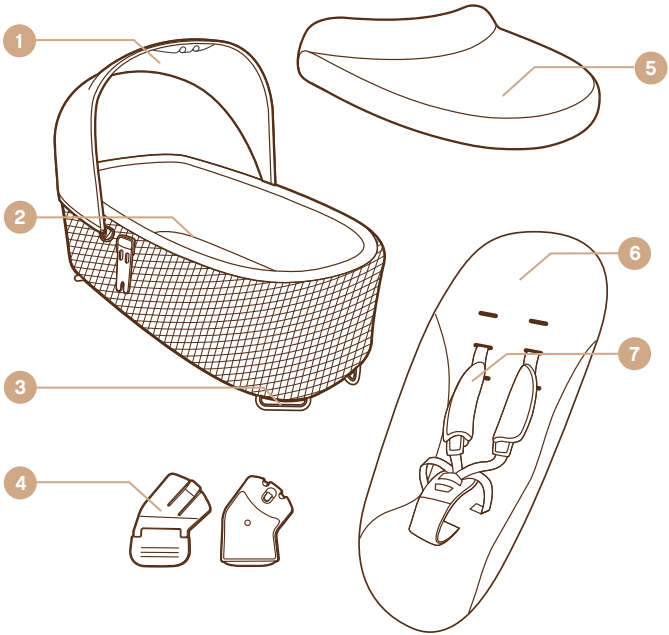
1
2
3
4
5
6
7

1 sunhood
2 mattress
3 foot stand
4 carrycot clips
5 reversible carrycot lid
6 fabric seat
7 harness

1 capote
2 matelas
3 repose pieds
4 clip nacelle
5 tablier nacelle
6 siège en maille filet
7 harnais

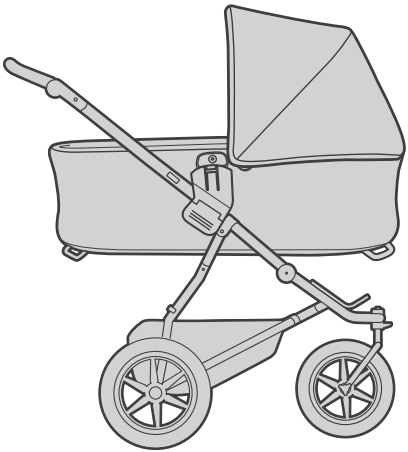

A

max load

9kg / 20lbs

B

max load

9kg / 20lbs

C

max load

15kg / 33lbs

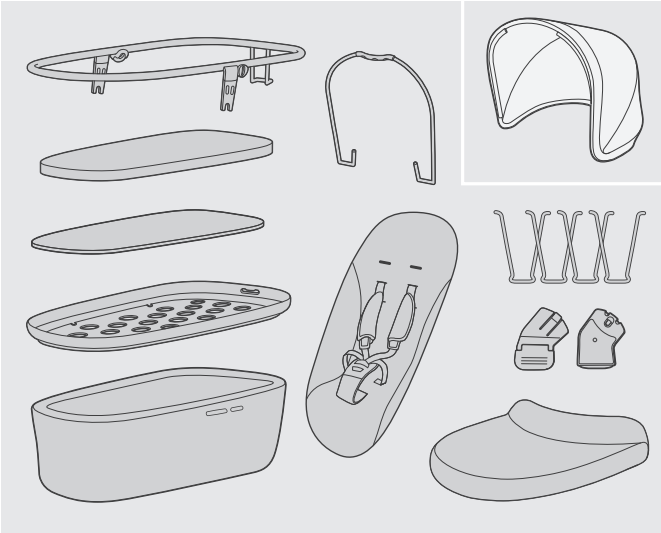

1

2

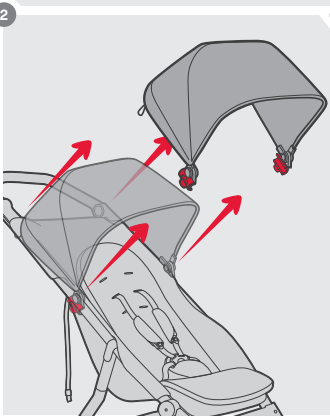

3

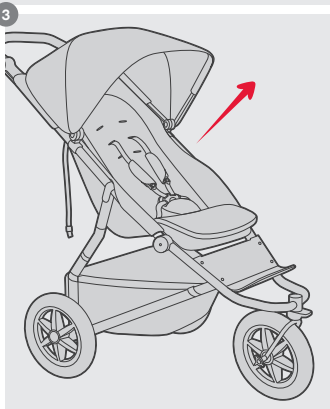

1

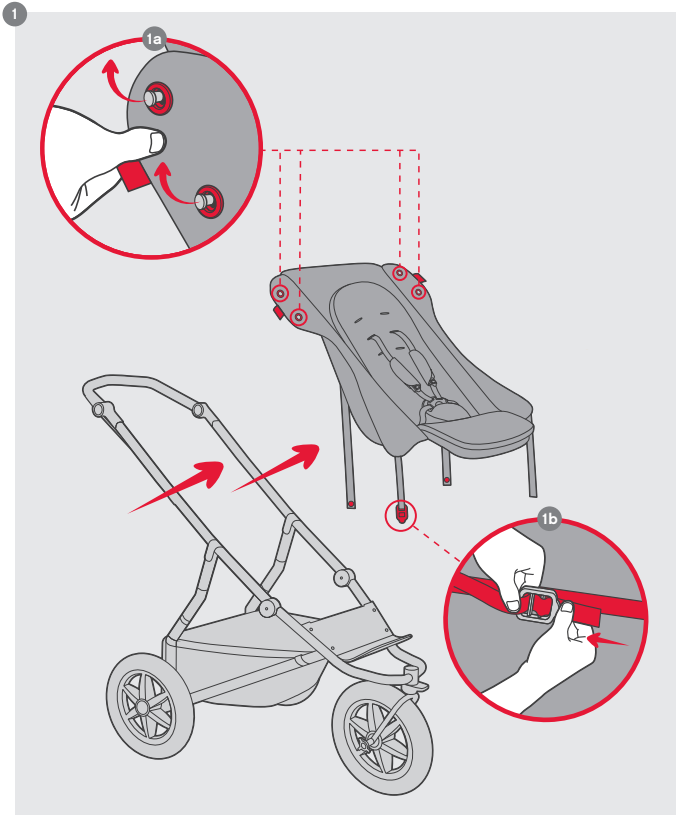

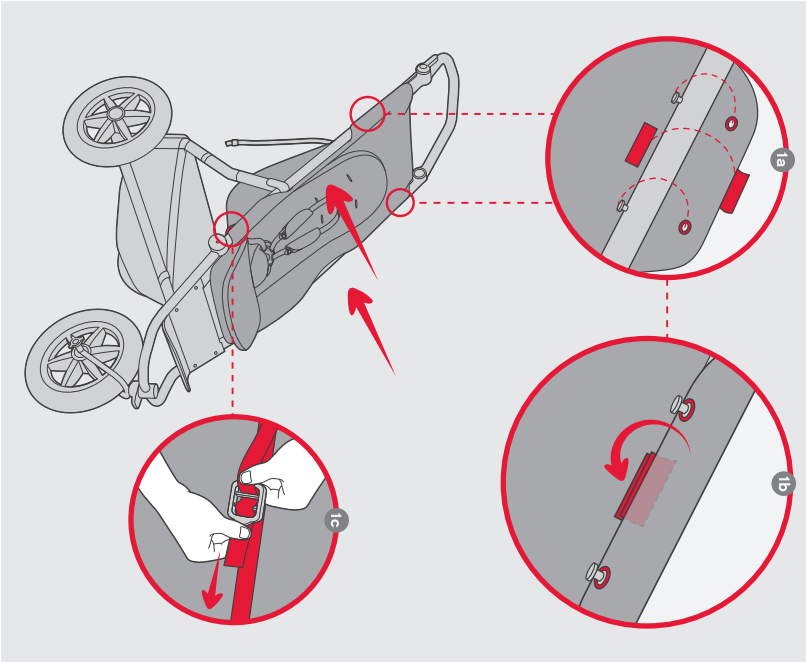
1a
1b
1c

A

max load

9kg / 20lbs

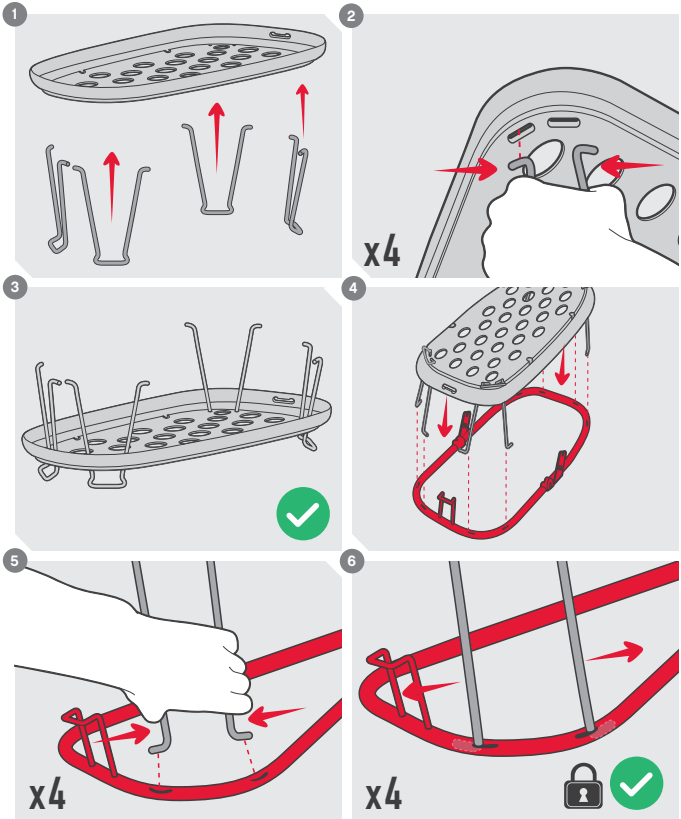
1
2
x4
3
4
5
x4
6
x4

1

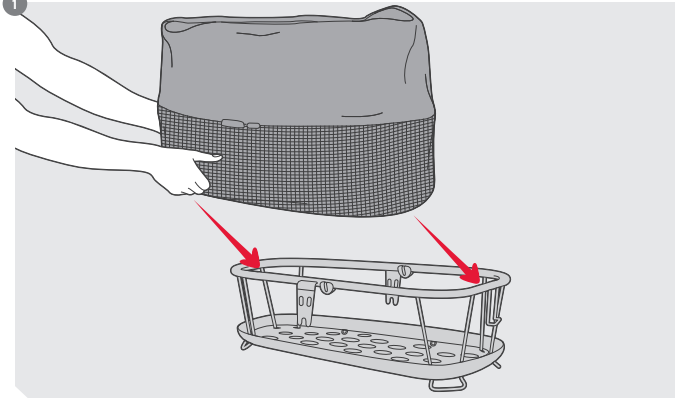

2

3

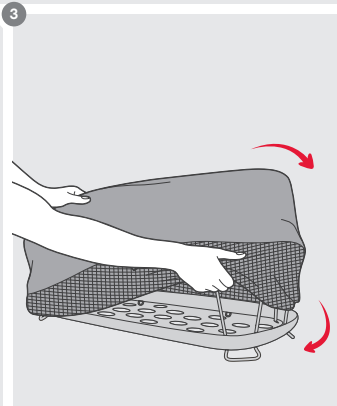

4

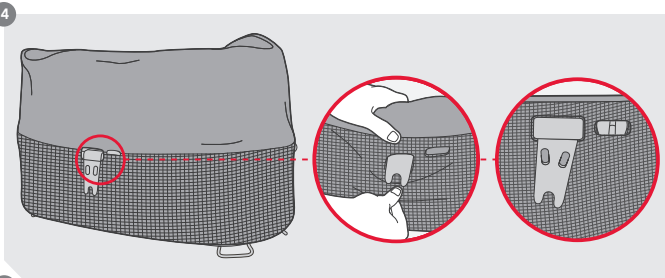

5

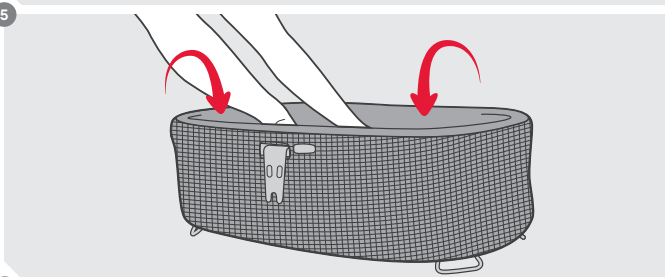

6

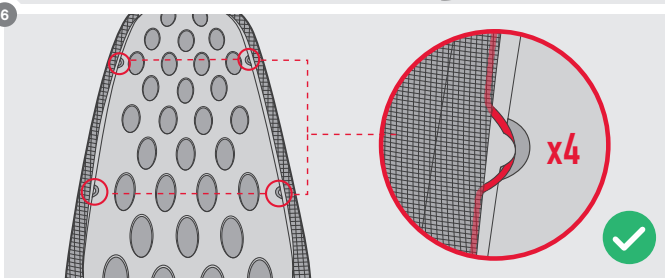

1

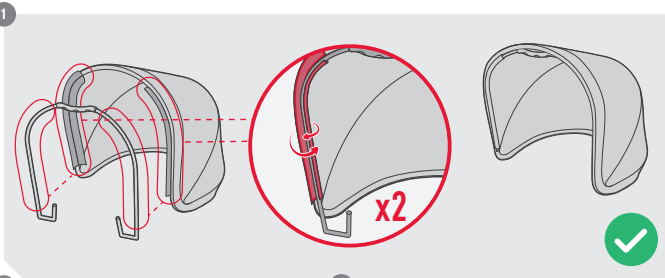

2

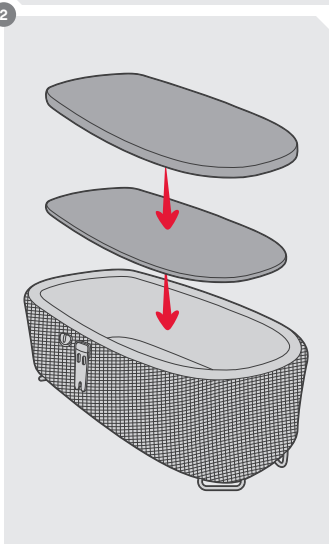

3

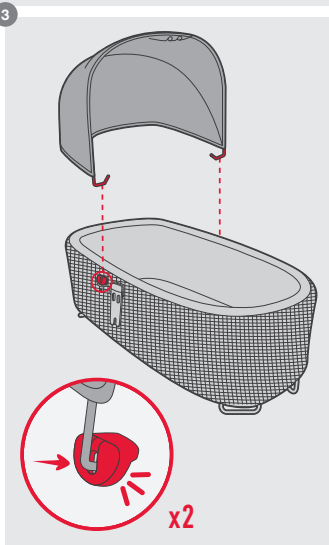

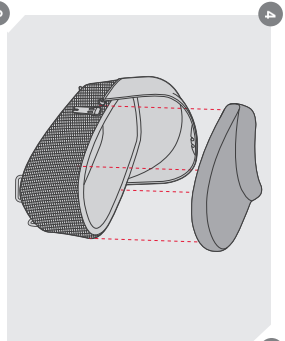
4

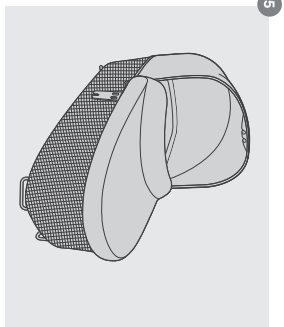
5

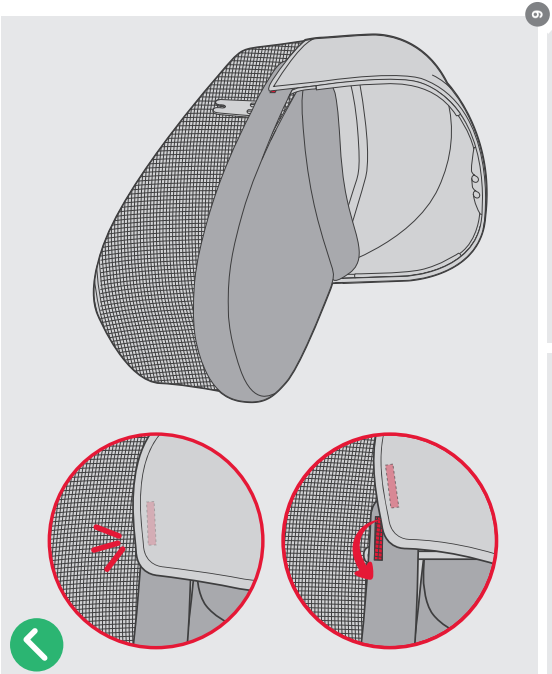
6

1

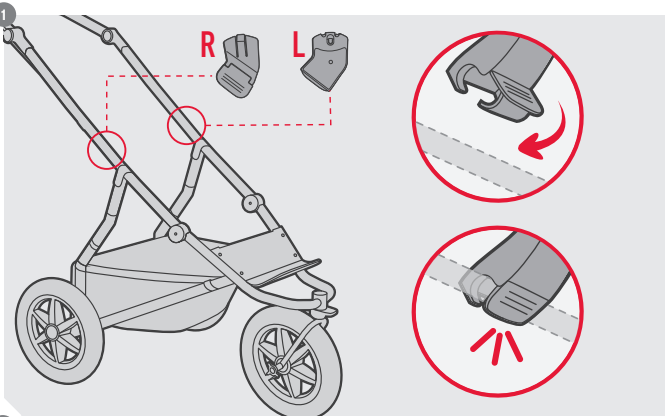

2

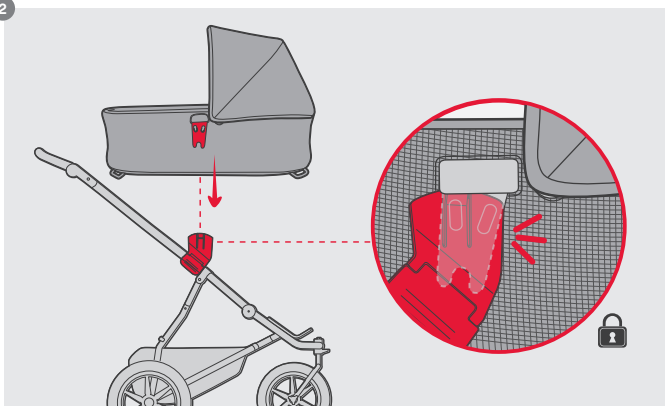

B

max load

9kg / 20lbs

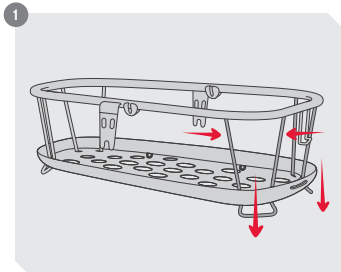
1

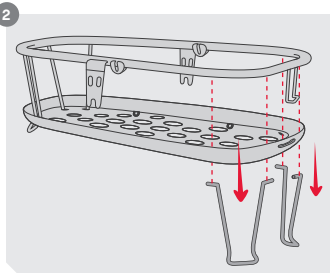
2

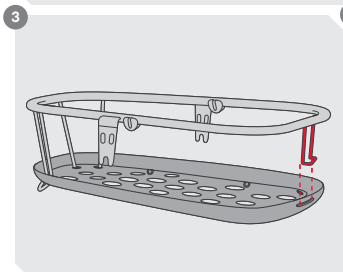
3

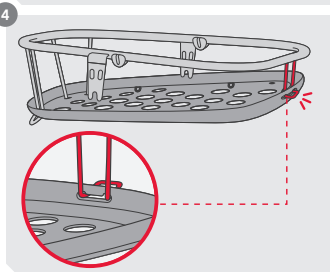
4

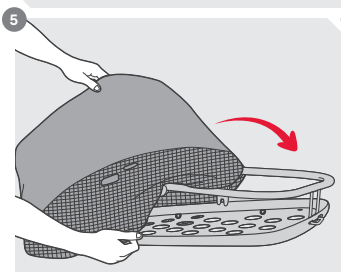
5

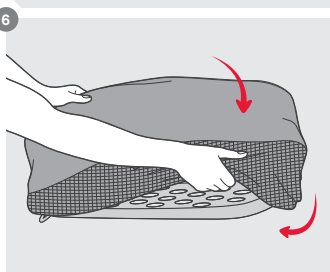
6

7

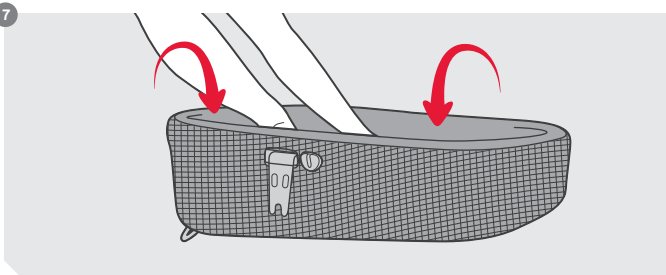

8

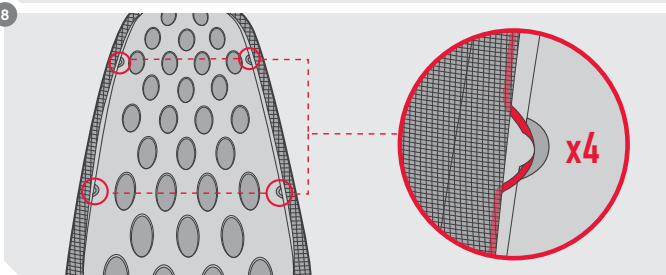

9

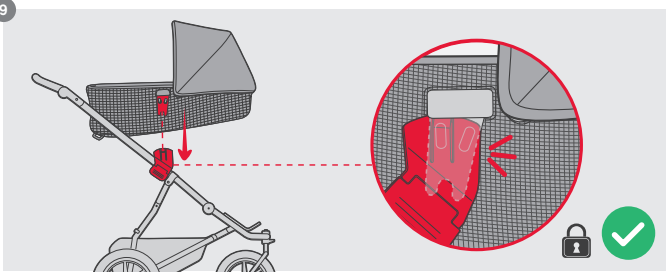

C

max load

15kg / 33lbs

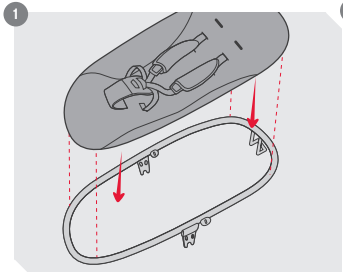
1

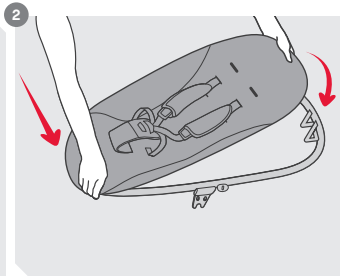
2

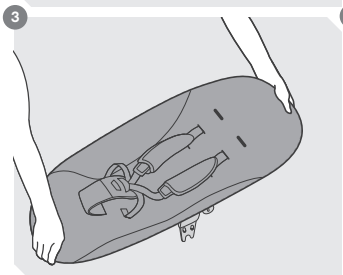
3

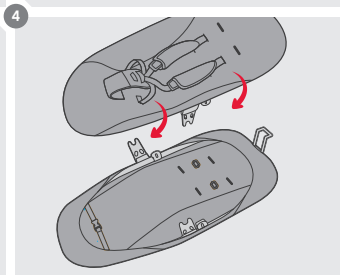
4

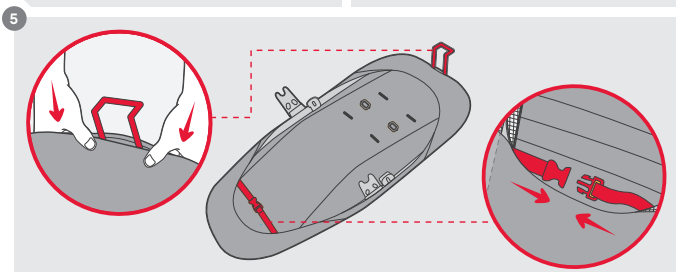
5

1

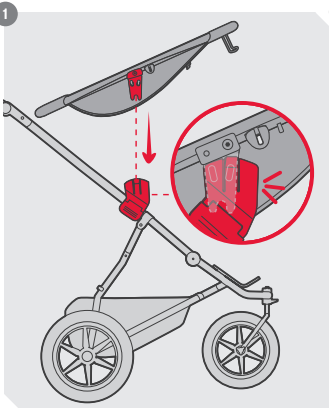

2

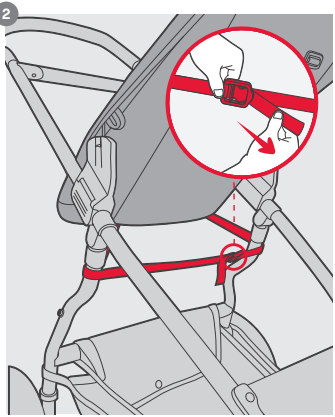

3

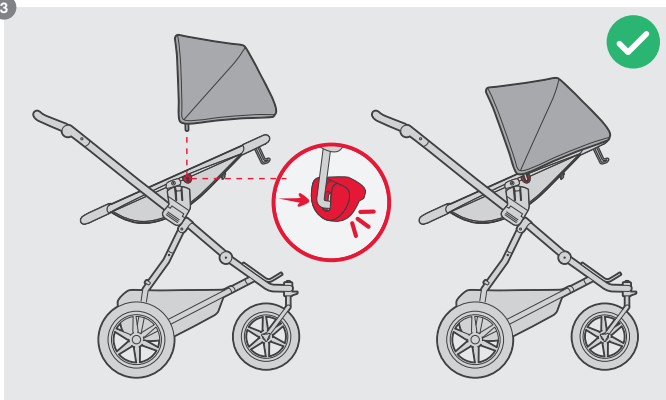

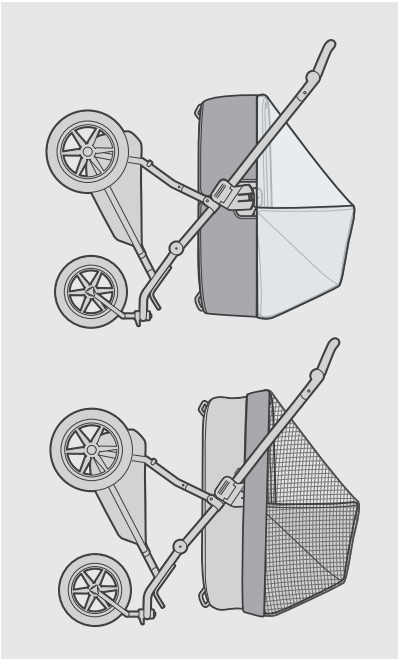

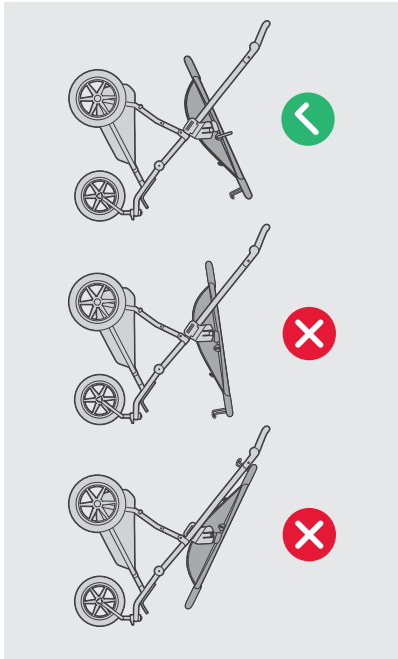

mountain buggy®

life without limit™

AUS/NZL

Mountain Buggy Australasia
102-112 Daniell Street
Newtown, Wellington 6021
New Zealand
+ 64 4 3800 833

EUR

Mountain Buggy Spain
Calle Casas de Campos
N'15, 3' Planta
Malaga 29001, Spain
+34-91-290 14 82

USA/CAN

Mountain Buggy USA
221 Jefferson Street
Fort Collins, CO 80524
USA
1 800 916 8442

FRA

Mountain Buggy France
15 rue Gertrude Bell
56000 Vannes
FRANCE
+ 33 (0) 2 97 44 88 26

GBR

Mountain Buggy UK
71-73 Victoria St
Windsor, Berkshire
SL4 1EH, United Kingdom
+44 (0) 20-30519264

CHN

Mountain Buggy China
No.10 East Chuangyeyuan
Road, Yangzhou
China
0086-514-87634533

Designed in New Zealand. Made in China
Conçu en Nouvelle-Zélande. Fabriqué en Chine

Conforme aux exigences de sécurité

8171-02