HOSHIZAKI

Parts List

Modular Flaker

Model
F-2001MWJ
F-2001MRJ(3)(-C)
F-2001MLJ

hoshizakiamerica.com

Number: 71380
Issued: 9-21-2017
Revised: 9-11-2019

CONTENTS

Note About Ordering Parts 3
A. Main Assembly & Refrigeration Circuit 4
F-2001MWJ 4
F-2001MRJ(3)(-C) 6
F-2001MLJ 8
B. Ice Making Unit 10
C. Water Circuit 12
D. Control Box Assembly 14
E. Accessories & Labels 15

Auxiliary Codes

F-2001MWJ
G-0 August 2017
H-0 April 2018
H-1 July 2018
J-0 January 2019
J-1 May 2019
J-2 July 2019

F-2001MRJ
G-0 August 2017
H-0 April 2018
H-1 July 2018
J-0 March 2019
J-1 May 2019
J-2 July 2019

F-2001MRJ-C
G-0 August 2017
H-0 April 2018
H-1 July 2018
J-0 January 2019
J-1 May 2019
J-2 TBD

F-2001MRJ3
G-0 August 2017
H-0 April 2018
H-1 July 2018
J-2 July 2019

F-2001MLJ
G-0 July 2017
H-0 March 2018
H-1 October 2018
J-0 January 2019
J-1 May 2019
J-2 August 2019

Auxiliary Code Breakdown

The auxiliary code is the first two characters in the serial number. The first character indicates the year. Years progress or regress in alphabetical order. The series runs from "A" through "V" and the letters "I" and "O" are skipped. The second character indicates significant part changes within a year. Base is "0" and this number advances for each change. In cases where there is a letter in parentheses, this designates the month. This is the last character in the serial number. The series runs from "(A)" through "(M)" and the letter "(I)" is skipped. This designation is only included when identifying a parts change within an auxiliary code.

Note About Ordering Parts

Most assemblies cannot be ordered as complete units; parts in the assemblies generally must be ordered separately.

A. Main Assembly & Refrigeration Circuit
F-2001MWJ
1/2

G-0 to J-0

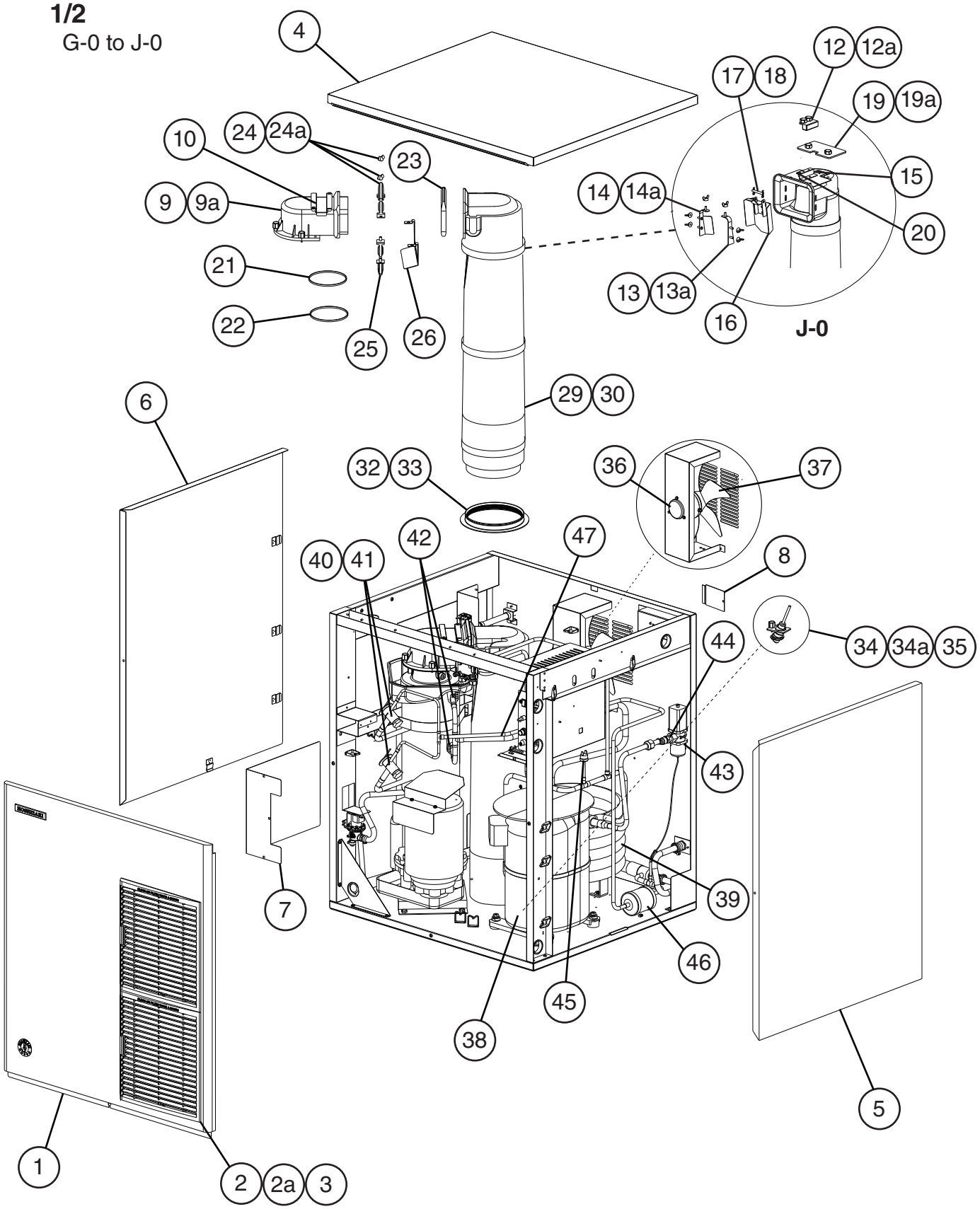

A. Main Assembly & Refrigeration Circuit
F-2001MWJ
2/2

J-1, J-2

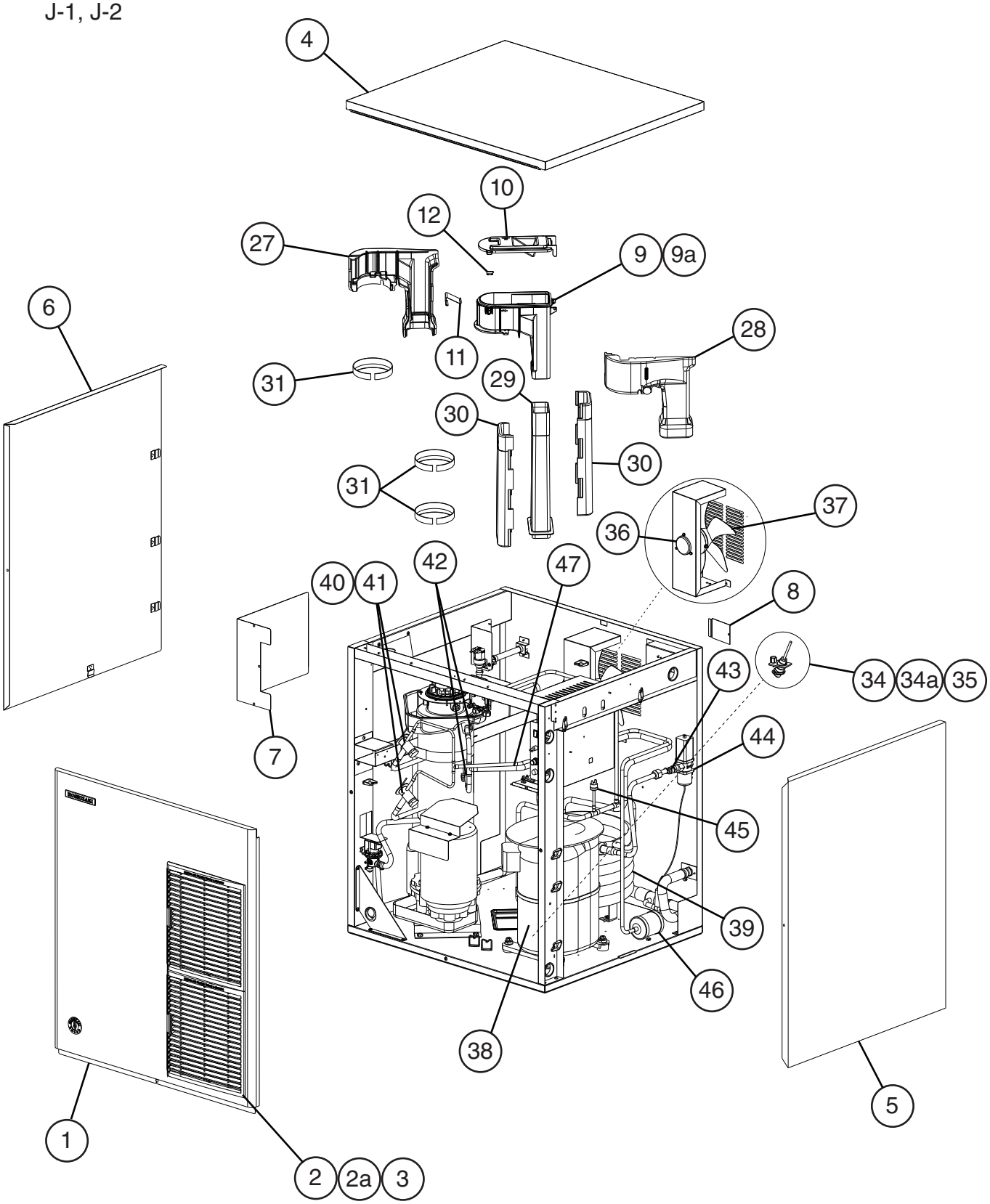

Title: A. Main Assembly & Refrigeration Circuit Model: F-2001MWJ												
				Required Number								
Index No.	Description	Material or Model Number	Part Number	G-0 to H-1	J-0	J-1 J-2						
Main Assembly												
1	Front Panel		2A2203-01	1	1	1						
2	Louver		1A0547-01	2	2	2						
2a	Push Retainer		4A2414-01	3	-	-						
3	Air Filter		2A2062G01	2	2	2						
4	Top Panel		2A8088-01	1	1	1						
5	Right Side Panel		2A2077G01	1	1	1						
6	Left Side Panel		2A2076G01	1	1	1						
7	Control Box Cover		3A7897-01	1	1	1						
8	Junction Box Cover		433410-01	1	1	1						
9	Spout		105378G01	1	1	-						
			122383P01			1						
9a	Thumbscrew		415949G11	3	3	-						
	Truss Head Screw		7C32-0416			3						
10	Spout Cover		4A5174-01	1	1	-						
			263888G01			1						
11	Spout Spring		478013M01			1						
12	Bin Control 2 Proximity Switch (mechanical bin control)		4A2033-01		1	-						
			P02940-01			1						
12a	Thumbscrew		415949G08		2	-						
13	Chute Baffle A		341012G01		1	-						
13a	Wing Nut		7E12-0400		3	-						
14	Chute Baffle B		341013G01		1	-						
14a	Wing Nut		7E12-0400		3	-						
15	Bin Control 2 Bracket (mechanical bin control)		3A1744G01		1	-						
16	Actuator		436848G02		1	-						
17	Shaft		436851-01		1	-						
18	Snap Pin		715S-0005		2	-						
19	Plate		4A2039-01		1	-						
19a	Thumbscrew		415949G10		2	-						
20	Truss Head Screw (ground)		7C32-0408		1	-						
21	O-Ring		4A4755-04	1	1	-						
22	Nylon Ring		431736-01	1	1	-						
23	Spout-to-Chute Packing		327040-01	1	1	-						
24	Upper Spout-to-Chute Strap		3A6912-02	1	1	-						
24a	Wing Nut		7E12-0600	2	2	-						
25	Lower Spout-to-Chute Strap		3A6913G01	1	1	-						
26	Drip Guide		3A1628-01	1	1	-						
27	Spout Insulation A		3A9762-01			1						
28	Spout Insulation B		3A9763-01			1						
29	Chute	**Round Base**	216219-04	1	-							
			216219-01		1	-						
		Square Base	263897P02			1						
30	Chute Insulation	**Round Base**	216220-01	1	1	-						
		Square Base	3B0065-01			2						
31	Insulation Strap (Tie)		436531G01			3						

Title: A. Main Assembly & Refrigeration Circuit Model: F-2001MWJ												
				Required Number								
Index No.	Description	Material or Model Number	Part Number	G-0 to H-1	J-0	J-1 J-2						
32	Chute Packing		432877-02	1	1	-						
33	Nylon Ring		327427-01	1	1	-						
34	Bin Control Housing (infrared sensor)		3A3478-01	1	1	1						
34a	Thumbscrew		415949G10	1	1	1						
35	Bin Control (infrared sensor)		4A4469-01	1	1	1						
36	Fan Motor		440917-01	1	1	1						
37	Fan Blade		434959-01	1	1	1						
Refrigeraton Circuit												
38	Compressor		4A4890-01	1	1	1						
39	Condenser		3A7324-01	1	1	1						
40	Thermostatic Expansion Valve		4A1117-01	2	2	2						
41	Thermostatic Expansion Valve Cover		4A1168-01	2	2	2						
42	Clamp		4A5641-01	2	2	2						
43	Water Regulating Valve		4A0911-08	1	1	1						
44	Male Connector		4A1087-01	1	1	1						
45	High-Pressure Switch		463180-05	1	1	1						
46	Drier		4A1338-01	1	1	1						
47	Heat Exchanger		1A5199G01	1	1	1						

A. Main Assembly & Refrigeration Circuit
F-2001MRJ(3)(-C)
1/2

G-0 to J-0

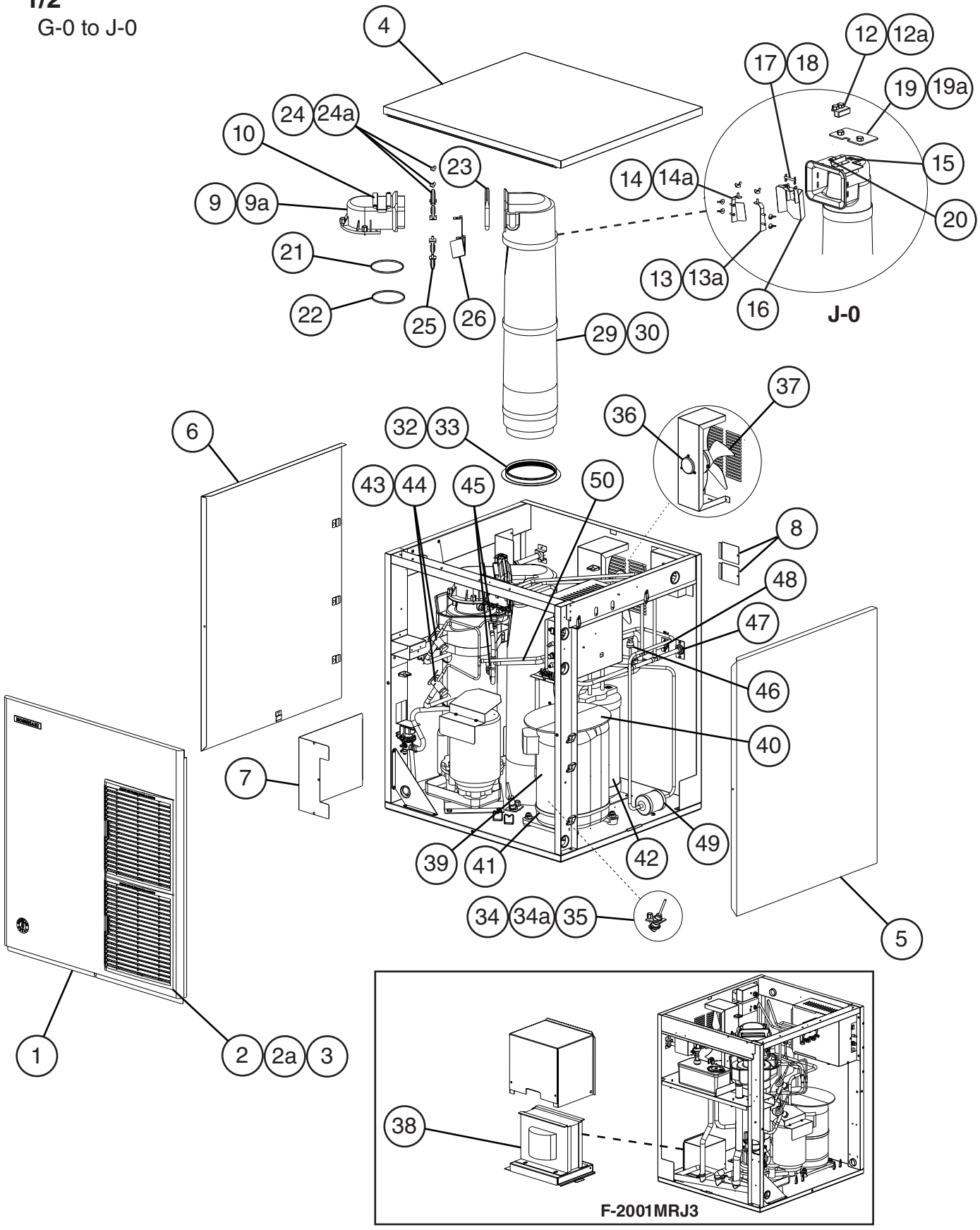

A. Main Assembly & Refrigeration Circuit
F-2001MRJ(3)(-C)
2/2

J-1, J-2

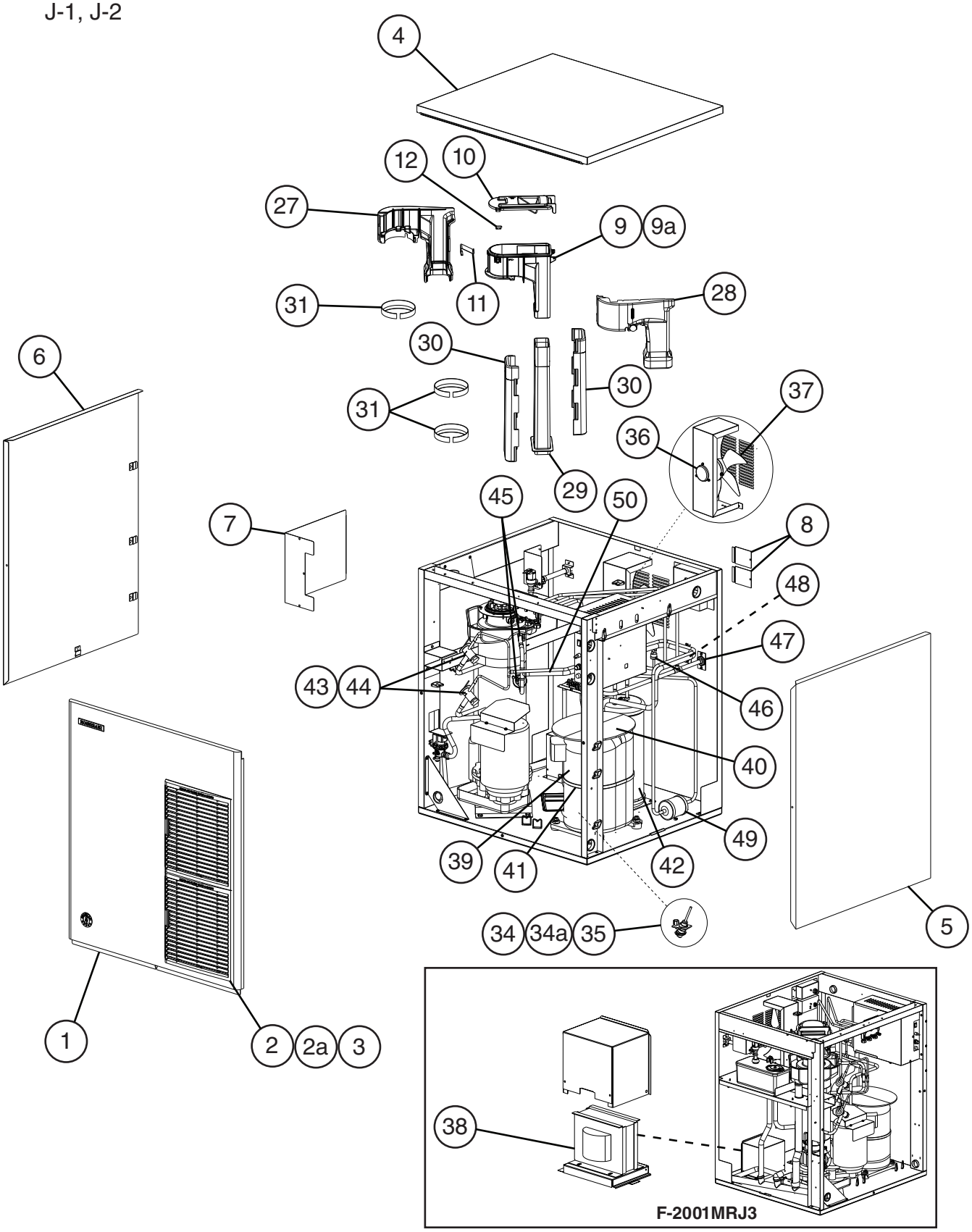

Title: A. Main Assembly & Refrigeration Circuit Model: F-2001MRJ(3)(-C)												
				Required Number								
Index No.	Description	Material or Model Number	Part Number	G-0 to H-1	J-0	J-1 J-2						
Main Assembly												
1	Front Panel		2A2033-01	1	1	1						
2	Louver		1A0547-01	2	2	2						
2a	Push Retainer		4A2414-01	1	-							
3	Air Filter		2A2062G01	2	2	2						
4	Top Panel		2A8088-01	1	1	1						
5	Right Side Panel		2A2077G01	1	1	1						
6	Left Side Panel		2A2076G01	1	1	1						
7	Control Box Cover		3A7897-01	1	1	1						
8	Junction Box Cover		433410-01	2	2	2						
9	Spout		105378G01	1	1	-						
			122383P01			1						
9a	Thumbscrew		415949G11	3	3	-						
	Truss Head Screw		7C32-0416			3						
10	Spout Cover		4A5174-01	1	1	-						
			263888G01			1						
11	Spout Spring		478013M01			1						
12	Bin Control 2 Proximity Switch (mechanical bin control)		4A2033-01		1	-						
			P02940-01			1						
12a	Thumbscrew		415949G08		2	1						
13	Chute Baffle A		341012G01		1	-						
13a	Wing Nut		7E12-0400		3	-						
14	Chute Baffle B		341013G01		1	-						
14a	Wing Nut		7E12-0400		3	-						
15	Bin Control 2 Bracket (mechanical bin control)		3A1744G01		1	-						
16	Actuator		436848G02		1	-						
17	Shaft		436851-01		1	-						
18	Snap Pin		715S-0005		2	-						
19	Plate		4A2039-01		1	-						
19a	Thumbscrew		415949G10		2	-						
20	Truss Head Screw (ground)		7C32-0408		1	-						
21	O-Ring		4A4755-04	1	1	-						
22	Nylon Ring		431736-01	1	1	-						
23	Spout-to-Chute Packing		327040-01	1	1	-						
24	Upper Spout-to-Chute Strap		3A6912-02	1	1	-						
24a	Wing Nut		7E12-0600	2	2	-						
25	Lower Spout-to-Chute Strap		3A6913G01	1	1	-						
26	Drip Guide		3A1628-01	1	1	-						
27	Spout Insulation A		3A9762-01			1						
28	Spout Insulation B		3A9763-01			1						
29	Chute	**Round Base**	216219-04	1	-							
			216219-01		1	-						
		Square Base	263897P02			1						
30	Chute Insulation	**Round Base**	216220-01	1	1	-						
		Square Base	3B0065-01			1						
31	Insulation Strap (Tie)		436531G01			3						

Title: A. Main Assembly & Refrigeration Circuit Model: F-2001MRJ(3)(-C)												
				Required Number								
Index No.	Description	Material or Model Number	Part Number	G-0 to H-1	J-0	J-1 J-2						
32	Chute Packing		432877-02	1	1	-						
33	Nylon Ring		327427-01	1	1	-						
34	Bin Control Housing (infrared sensor)		3A3478-01	1	1	1						
34a	Thumbscrew		415949G10	1	1	1						
35	Bin Control (infrared sensor)		4A4469-01	1	1	1						
36	Fan Motor		440917-01	1	1	1						
37	Fan Blade		434959-01	1	1	1						
38	Main Transformer	**F-2001MRJ3**	2U0128-01	1	1	1						
Refrigeraton Circuit												
39	Compressor	**F-2001MRJ F-2001MRJ-C**	4A4890-01	1	1	1						
		F-2001MRJ3	4A4891-01	1	1	1						
40	Compressor Insulation		453969-01	1	1	1						
41	Crankcase Heater		4A5397-02	1	1	1						
42	Receiver		4A6214-01	1	1	1						
43	Thermostatic Expansion Valve		4A1117-01	2	2	2						
44	Thermostatic Expansion Valve Cover		4A1168-01	2	2	2						
45	Clamp		4A5641-01	2	2	2						
46	High-Pressure Switch		463180-04	1	1	1						
47	Discharge Line Coupling		434072-01	1	1	1						
48	Liquid Line Coupling		426554-01	1	1	1						
49	Drier		4A1338-01	1	1	1						
50	Heat Exchanger		1A5199G01	1	1	1						

A. Main Assembly & Refrigeration Circuit
F-2001MLJ
1/2

G-0 to J-0

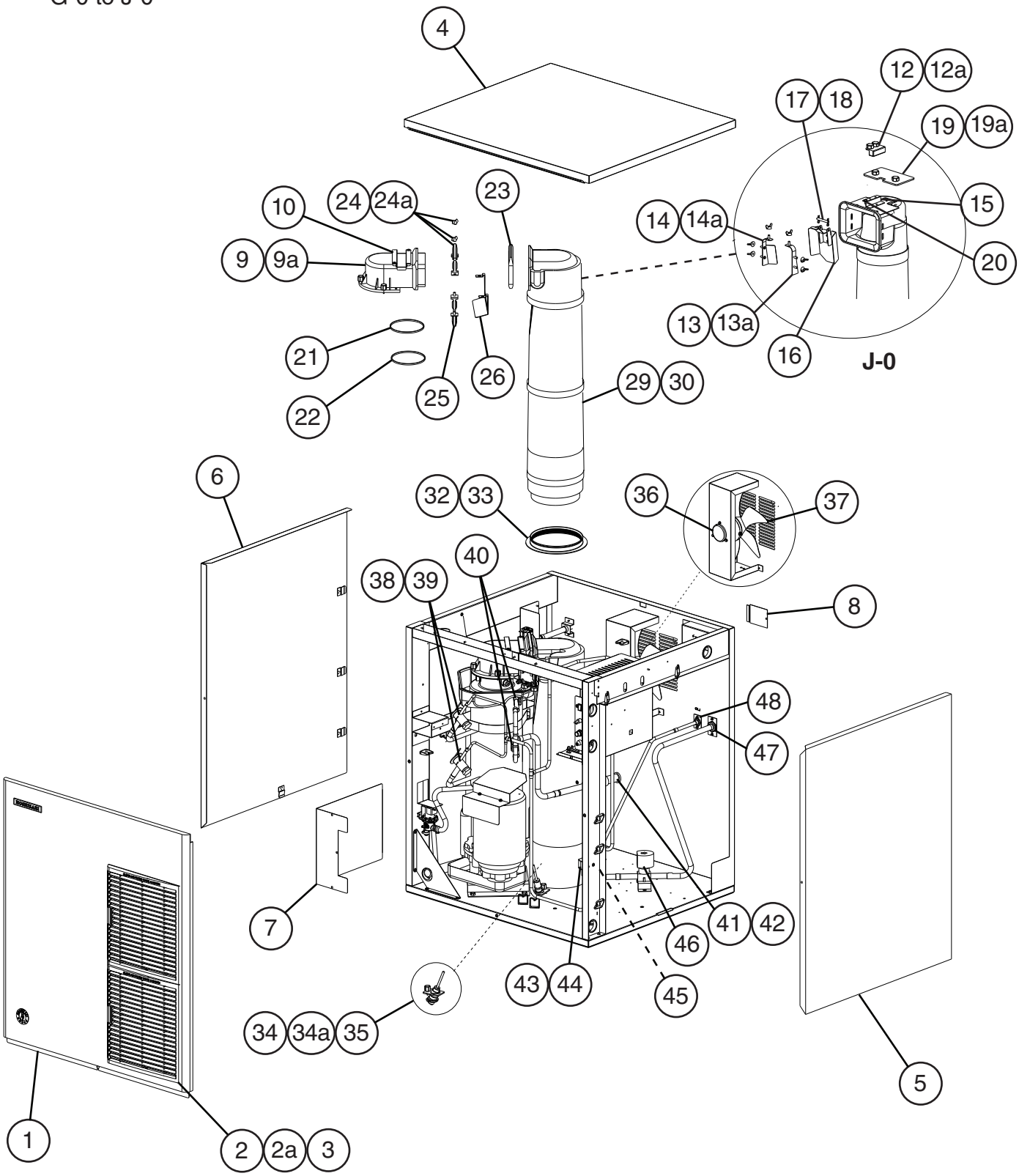

A. Main Assembly & Refrigeration Circuit
F-2001MLJ
2/2

J-1, J-2

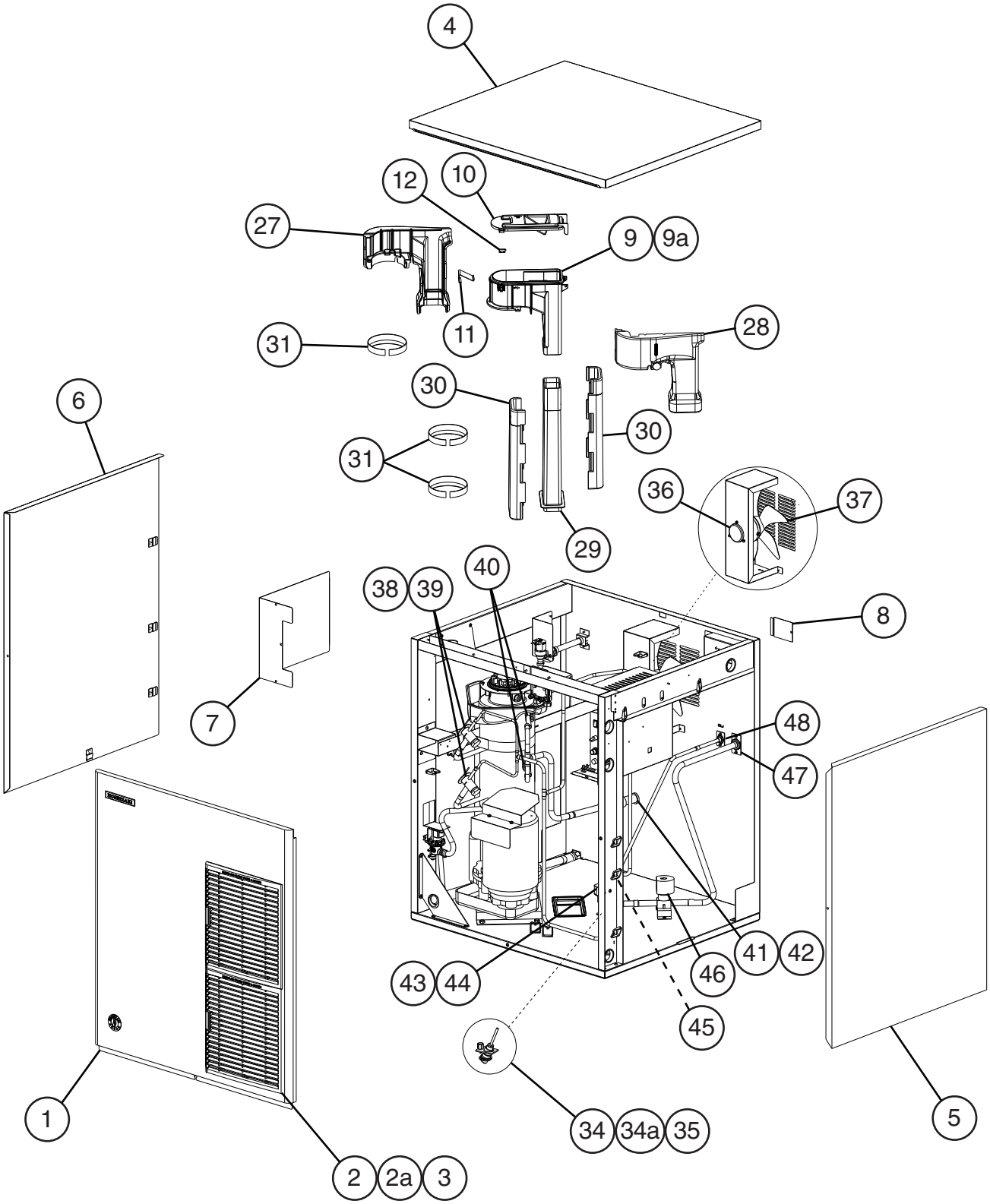

Title: A. Main Assembly & Refrigeration Circuit Model: F-2001MLJ												
				Required Number								
Index No.	Description	Material or Model Number	Part Number	G-0 to H-1	J-0	J-1 J-2						
Main Assembly												
1	Front Panel		2A2203-01	1	1	1						
2	Louver		1A0547-01	2	2	2						
2a	Push Retainer		4A2414-01	1	-							
3	Air Filter		2A2062G01	2	2	2						
4	Top Panel		2A8088-01	1	1	1						
5	Right Side Panel		2A2077G01	1	1	1						
6	Left Side Panel		2A2076G01	1	1	1						
7	Control Box Cover		3A7897-01	1	1	1						
8	Junction Box Cover		433410-01	1	1	1						
9	Spout		105378G01	1	1	-						
			122383P01			1						
9a	Thumbscrew		415949G11	3	3	-						
	Truss Head Screw		7C32-0416			3						
10	Spout Cover		4A5174-01	1	1	-						
			263888G01			1						
11	Spout Spring		478013M01			1						
12	Bin Control 2 Proximity Switch (mechanical bin control)		4A2033-01		1	-						
			P02940-01			1						
12a	Thumbscrew		415949G08		2	1						
13	Chute Baffle A		341012G01		1	-						
13a	Wing Nut		7E12-0400		3	-						
14	Chute Baffle B		341013G01		1	-						
14a	Wing Nut		7E12-0400		3	-						
15	Bin Control 2 Bracket (mechanical bin control)		3A1744G01		1	-						
16	Actuator		436848G02		1	-						
17	Shaft		436851-01		1	-						
18	Snap Pin		715S-0005		2	-						
19	Plate		4A2039-01		1	-						
19a	Thumbscrew		415949G10		2	-						
20	Truss Head Screw (ground)		7C32-0408		1	-						
21	O-Ring		4A4755-04	1	1	-						
22	Nylon ring		431736-01	1	1	-						
23	Spout-to-Chute Packing		327040-01	1	1	-						
24	Upper Spout-to-Chute Strap		3A6912-02	1	1	-						
24a	Wing Nut		7E12-0600	2	2	-						
25	Lower Spout-to-Chute Strap		3A6913G01	1	1	-						
26	Drip Guide		3A1628-01	1	1	-						
27	Spout Insulation A		3A9762-01			1						
28	Spout Insulation B		3A9763-01			1						
29	Chute	**Round Base**	216219-04	1	-							
			216219-01		1	-						
		Square Base	263897P02			1						
30	Chute Insulation	**Round Base**	216220-01	1	1	-						
		Square Base	3B0065-01			1						
31	Insulation Strap (Tie)		436531G01			3						

Title: A. Main Assembly & Refrigeration Circuit Model: F-2001MLJ												
				Required Number								
Index No.	Description	Material or Model Number	Part Number	G-0 to H-1	J-0	J-1 J-2						
32	Chute Packing		432877-02	1	1	-						
33	Nylon Ring		327427-01	1	1	-						
34	Bin Control Housing (infrared sensor)		3A3478-01	1	1	1						
34a	Thumbscrew		415949G11	1	1	1						
35	Bin Control (infrared sensor)		4A4469-01	1	1	1						
36	Fan Motor		440917-01	1	1	1						
37	Fan Blade		434959-01	1	1	1						
Refrigeraton Circuit												
38	Thermostatic Expansion Valve		4A1117-01	2	2	2						
39	Thermostatic Expansion Valve Cover		4A1168-01	2	2	2						
40	Clamp		4A5641-01	2	2	2						
41	Evaporator Pressure Regulator Valve		446872-02	1	1	1						
42	Evaporator Pressure Regulator Valve Cover		340434-01	1	1	1						
43	Liquid Line Valve Body		4A3276-01	1	1	1						
44	Valve Coil		4A3277-01	1	1	1						
45	Strainer		4A1385-01	1	1	1						
46	Suction Line Valve		446873-01	1	1	1						
47	Suction Line Coupling		448569-01	1	1	1						
48	Liquid Line Coupling		426554-01	1	1	1						

B. Ice Making Unit

F-2001MWJ, F-2001MRJ(3)(-C), F-2001MLJ

G-0 to J-2

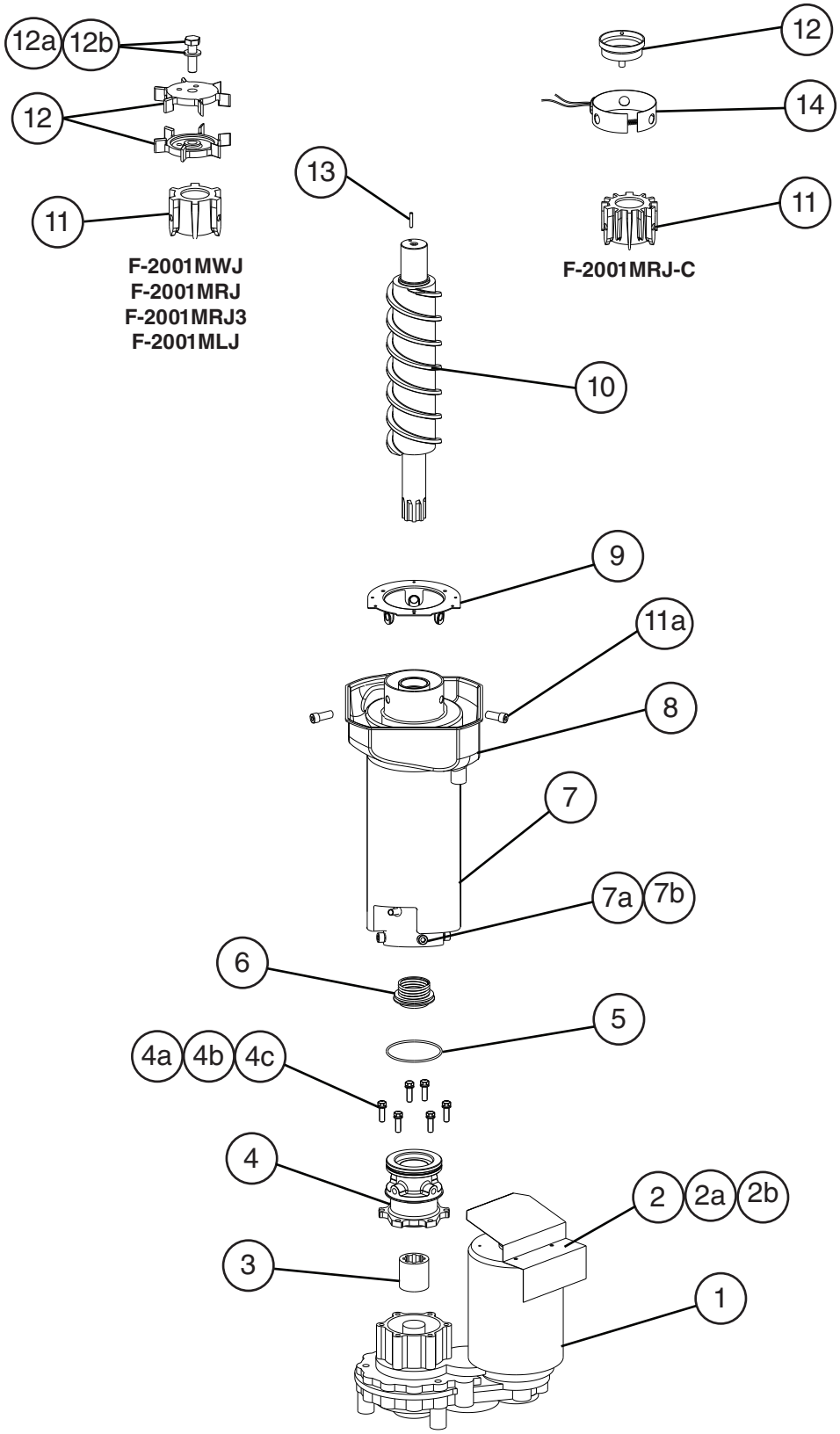

Title: B. Ice Making Unit Model: F-2001MWJ, F-2001MRJ(3)(-C), F-2001MLJ												
				Required Number								
Index No.	Description	Material or Model Number	Part Number	G-0 to J-2								
1	Gear Motor		2U0129-01	1								
2	Gear Motor Barrier		3A1639-01	1								
2a	Truss Head Screw	4×8, SS	7C32-0408	2								
2b	Rubber Washer		4A5268-01	2								
3	Spline Coupling		420372-01	1								
4	Housing		206509G02	1								
4a	Hex Head Bolt	8××0, SS	4A5640-01	6								
4b	Plain Washer		7W22-0800	6								
4c	Split Lock Washer		7L22-0800	6								
5	O-Ring		4A4755-04	1								
6	Mechanical Seal		432493-01	1								
7	Evaporator		2A7028G01	1								
7a	Socket Head Cap Screw		7S12-1020	4								
7b	Split Lock Washer		7L22-1000	4								
8	Drip Pan		2A6885-01	1								
9	Flange		352714-01	1								
10	Auger		120864G02	1								
11	Extruding Head	**F-2001MWJ** **F-2001MRJ** **F-2001MRJ3** **F-2001MLJ**	216407G01	1								
		F-2001MRJ-C	264203G02	1								
11a	Seal Bolt		474757G02	3								
12	Cutter	**F-2001MWJ** **F-2001MRJ** **F-2001MRJ3** **F-2001MLJ**	327026-01	2								
		F-2001MRJ-C	315736G01	1								
12a	Hex Head Bolt	**F-2001MWJ** **F-2001MRJ** **F-2001MRJ3** **F-2001MLJ**	7B02-1035	1								
12b	Split Lock Washer	**F-2001MWJ** **F-2001MRJ** **F-2001MRJ3** **F-2001MLJ**	7L22-1000	1								
13	Dowel Pin	**F-2001MWJ** **F-2001MRJ** **F-2001MRJ3** **F-2001MLJ**	713S-0526	1								
14	Evaporator Heater	**F-2001MRJ-C**	4A4335-01	1								

C. Water Circuit

F-2001MWJ, F-2001MRJ(3)(-C), F-2001MLJ

G-0 to J-2

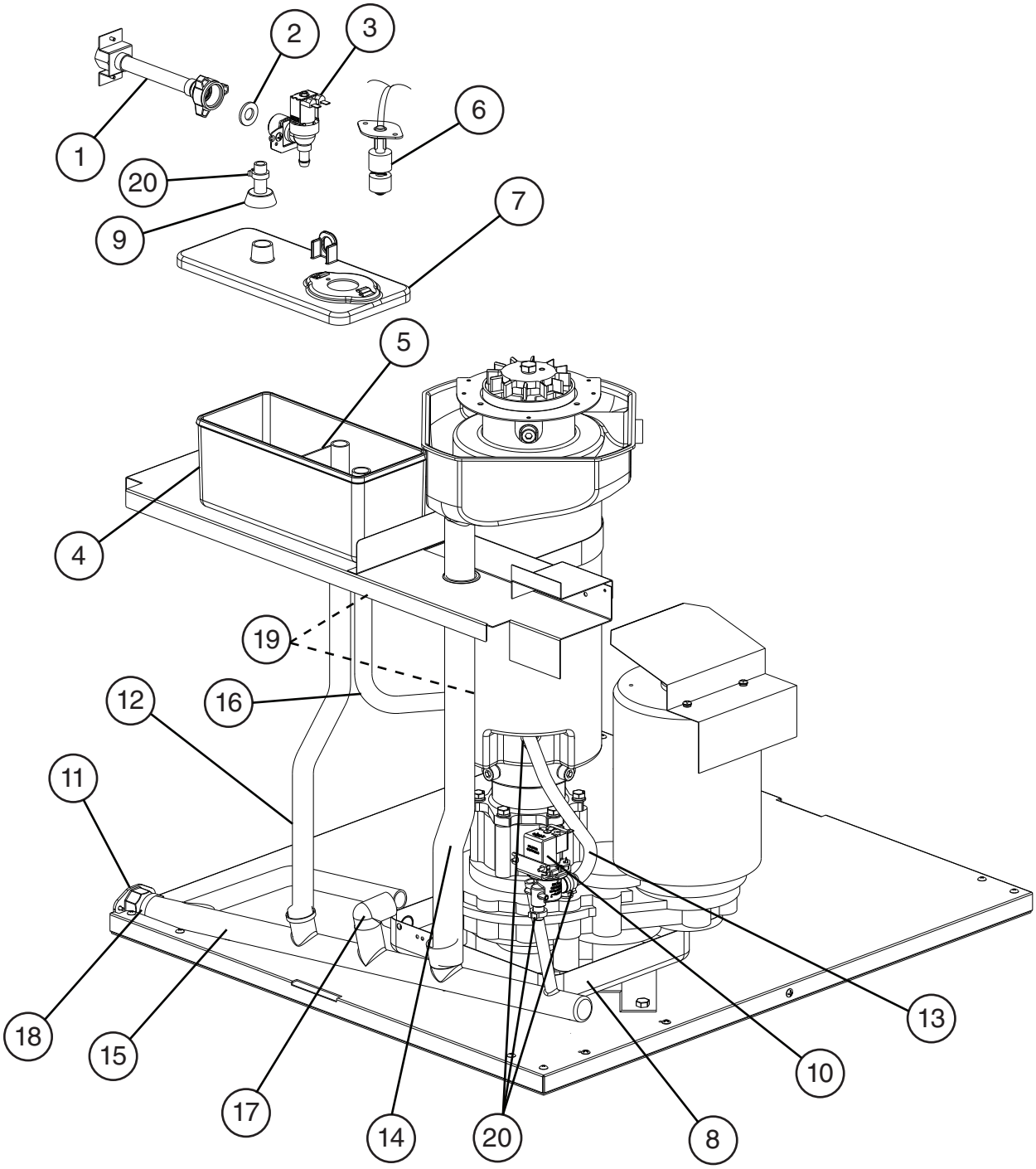

Title: C. Water Circuit Model: F-2001MWJ, F-2001MRJ(3)(-C), F-2001MLJ												
				Required Number								
Index No.	Description	Material or Model Number	Part Number	G-0 to J-2								
1	Water Supply Pipe		4A0891G02	1								
2	Washer		413854-03	1								
3	Inlet Water Valve		4A5309-01	1								
4	Reservoir		208125-01	1								
5	Reservpor Seperator		423538-02	1								
6	Float Switch		435490-01	1								
7	Reservoir Cover		208126-01	1								
8	Drain Pan		219358G01	1								
9	Reservoir Inlet		4A0869-01	1								
10	Drain Valve		4A2772-02	1								
11	Drain Fitting		4A5528-01	1								
12	Vinyl Hose	L=480 mm	7725-1923	1								
13	Silicone Hose	L=225 mm	7730I3896	1								
14	Vinyl Hose	L=525 mm	4A0658L01	1								
15	Drain Hose		3A7490-01	1								
16	Reservoir Drain Hose	L=260 mm	7730-1519	1								
17	Elbow		4A5624-01	1								
Hose Clamps												
18	Hose Clamp	26-30 mm	4A2017-02	1								
19	Hose Clamp	17-21 mm	4A2017-05	2								
20	Hose Clamp	13.5-15 mm	4A2017-08	4								

D. Control Box Assembly

F-2001MWJ, F-2001MRJ(3)(-C)

G-0 to J-2

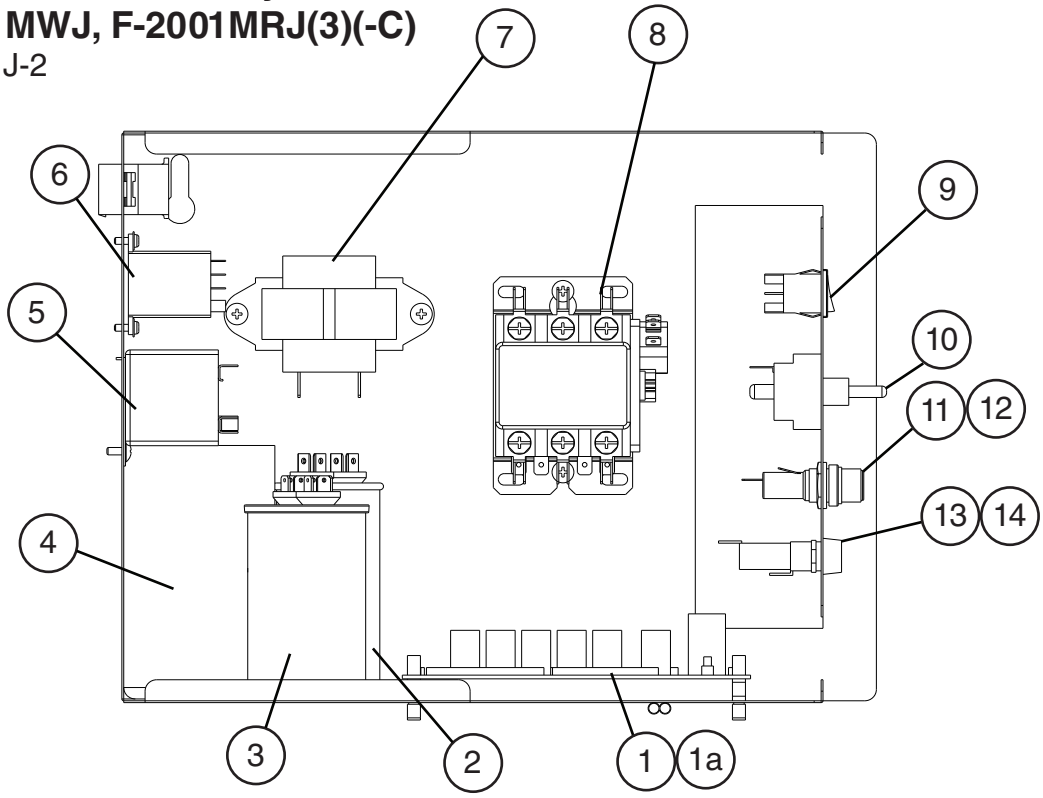

Title: D. Control Box Assembly Model: F-2001MWJ, F-2001MRJ(3)(-C), F-2001MLJ												
				Required Number								
Index No.	Description	Material or Model Number	Part Number	G-0 to J-2								
1	Control Board		2A9093-01	1								
1a	Control Board Support		4A0336-03	4								
2	Start Capacitor	**F-2001MWJ** **F-2001MRJ** **F-2001MRJ-C**	3A0076-12	1								
3	Run Capacitor	**F-2001MWJ** **F-2001MRJ** **F-2001MRJ-C**	3A2005-13	1								
4	Gear Motor Capacitor		3A2005-15	1								
5	Start Relay	**F-2001MWJ** **F-2001MRJ** **F-2001MRJ-C**	4A1107-09	1								
6	Compressor Control Relay		4A6558-01	1								
7	Control Transformer		4A0557-01	1								
8	Magnetic Contactor	**F-2001MWJ** **F-2001MRJ** **F-2001MRJ3** **F-2001MRJ-C**	4A0794-01	1								
9	Control Switch		4A0558-01	1								
10	Power Switch		4A2332-01	1								
11	Fuse Holder (Control)		4A5443-01	1								
12	Fuse (Control)	1A, 250VAC	4A0893-01	1								
13	Fuse Holder (Gear Motor)		4A6101-01	1								
14	Fuse (Gear Motor)	7A, 125VAC Slow Blow	4A3804-01	1								

E. Accessories & Labels

F-2001MWJ, F-2001MRJ(3)(-C), F-2001MLJ

G-0 to J-2

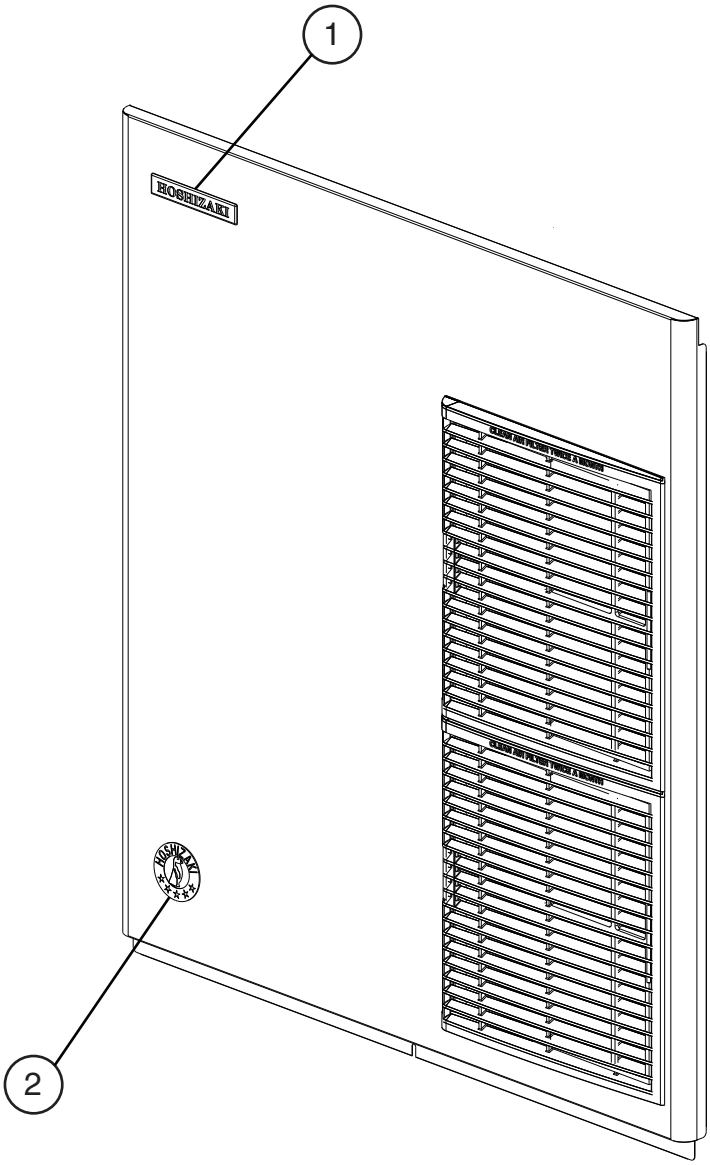

Title: E. Accessories & Labels Model: F-2001MWJ, F-2001MRJ(3)(-C), F-2001MLJ												
				Required Number								
Index No.	Description	Material or Model Number	Part Number	G-0 to J-2								
1	Hoshizaki Emblem Label		4A0560-01	1								
2	Penguin Label		475552L02	1								
3	Universal Brace		4A0363-01	2								
3a	Hex Bolt	5×12, SS	7B02-0512	2								