HOSHIZAKI

Parts List

Stackable Crescent Cuber

Models
KM-1601MRJ/3

hoshizakiamerica.com

Number: 71394
Issued: 11-1-2017
Revised: 12-3-2019

CONTENTS

Auxiliary Codes 3
Note About Ordering Parts 3
A. Main Assembly & Refrigeration Circuit 4
B. Water Circuit 6
C. Control Box Assembly 9
D. Accessories and Labels 10

Auxiliary Codes

KM-1601MRJ

F-0	December 2016
H-0	February 2018
J-0	January 2019

KM-1601MRJ3

F-0	December 2016
H-0	February 2018
J-0	January 2019
J-1	April 2019
J-0	May 2019

Auxiliary Code Breakdown

The auxiliary code is the first two characters in the serial number. The first character indicates the year. Years progress or regress in alphabetical order. The series runs from "A" through "V" and the letters "I" and "O" are skipped. The second character indicates significant part changes within a year. Base is "0" and this number advances for each change. In cases where there is a letter in parentheses, this designates the month. This is the last character in the serial number. The series runs from "(A)" through "(M)" and the letter "(I)" is skipped. This designation is only included when identifying a parts change within an auxiliary code.

Note About Ordering Parts

Most assemblies cannot be ordered as complete units; parts in the assemblies generally must be ordered separately.

A. Main Assembly & Refrigeration Circuit

KM-1601MRJ/3

F-0 to J-1

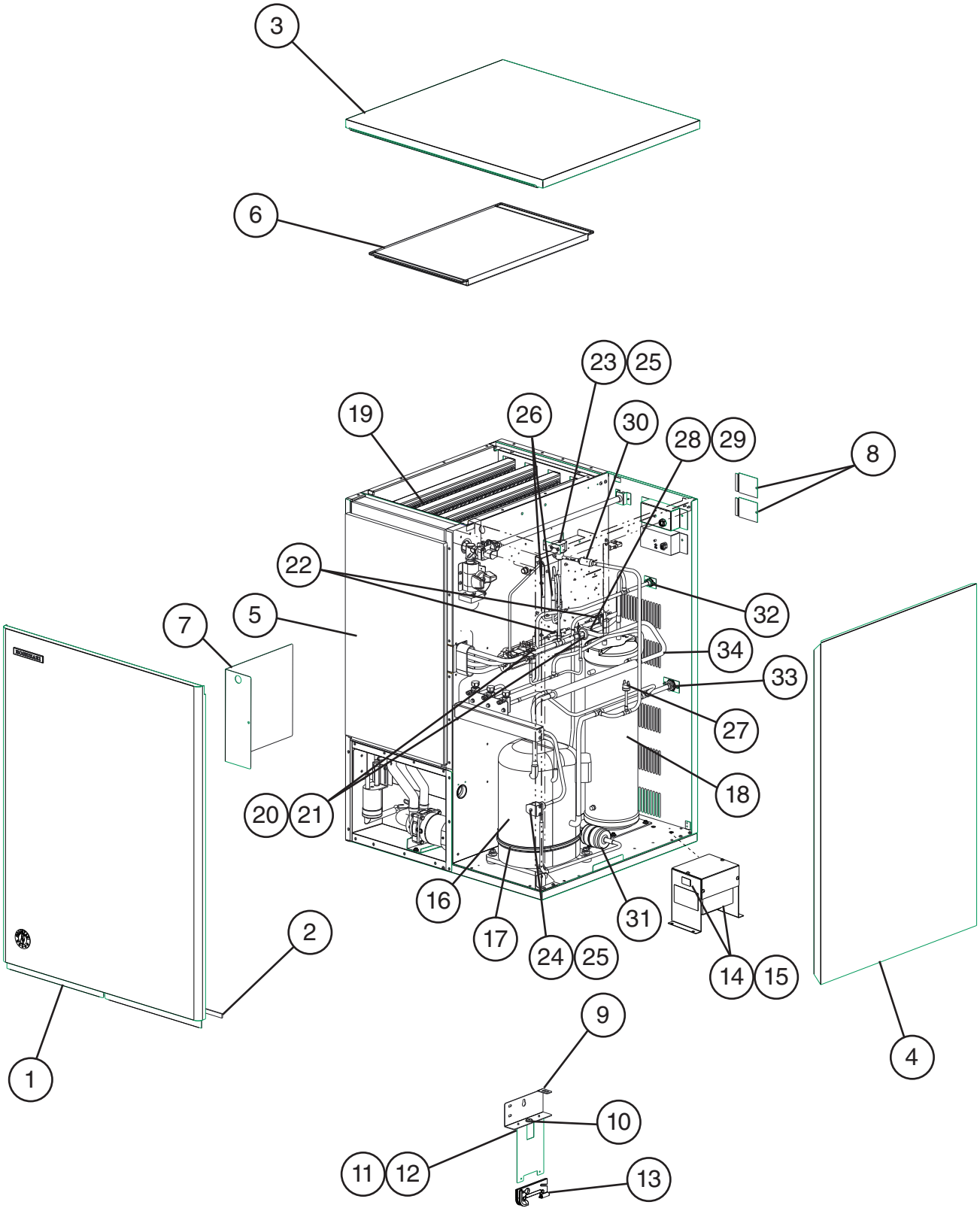

Title: A. Main Assembly & Refrigeration Circuit Model: KM-1601MRJ/3												
				Required Number								
Index No.	Description	Material or Model Number	Part Number	F-0 to J-1								
Ice Cuber Assembly												
1	Front Panel		2A2164-02	1								
2	Gasket		4A0808L02	1								
3	Top Panel		2A8088-01	1								
4	Right Side Panel		2A2165G01	1								
5	Front Insulation		322713G01	1								
6	Top Insulation		322714G01	1								
7	Control Box Cover		3A2386-01	1								
8	Junction Box Cover		433410-01	2								
9	Bin Control Bulb Holder C		3A0148-01	1								
10	Capillary Tube Bushing		425307-02	1								
11	Spacer		435087-01	1								
12	Bin Control Bulb Holder B		435078-01	1								
13	Bin Control Bulb Holder		3A3903-01	1								
14	Main Transformer	**KM-1601MRJ3**	4A0817-01	1								
15	Voltage Tap Switch	**KM-1601MRJ3**	4A1477-01	1								
Refrigeration Circuit												
16	Compressor	**KM-1601MRJ**	4A2334-01	1								
		KM-1601MRJ3	4A2330-01	1								
17	Crankcase Heater		4A5397-02	1								
18	Receiver		4A6215-01	1								
19	Evaporator	SA-5361	1A4309G01	1								
20	Thermostatic Expansion Valve		4A1482-01	2								
21	Thermostatic Expansion Valve Cover		3A0944-01	2								
22	Thermostatic Expansion Valve Bulb Holder		3A0107-01	2								
23	Hot Gas Valve Body		4A3978-01	1								
24	Liquid Line Valve Body		4A3276-01	1								
25	Valve Coil		4A3277-01	2								
26	Check Valve		4A1373-01	2								
27	High-Pressure Switch		463180-04	1								
28	Thermistor		429006-03	1								
29	Thermistor Holder		427430-01	1								
30	Strainer		441569-02	1								
31	Drier		4A2663-01	1								
32	Liquid Line Coupling		426554-01	1								
33	Discharge Line Coupling		434072-01	1								
34	Heat Exchanger		1A4327G01	1								

B. Water Circuit

KM-1601MRJ/3

F-0 to J-1

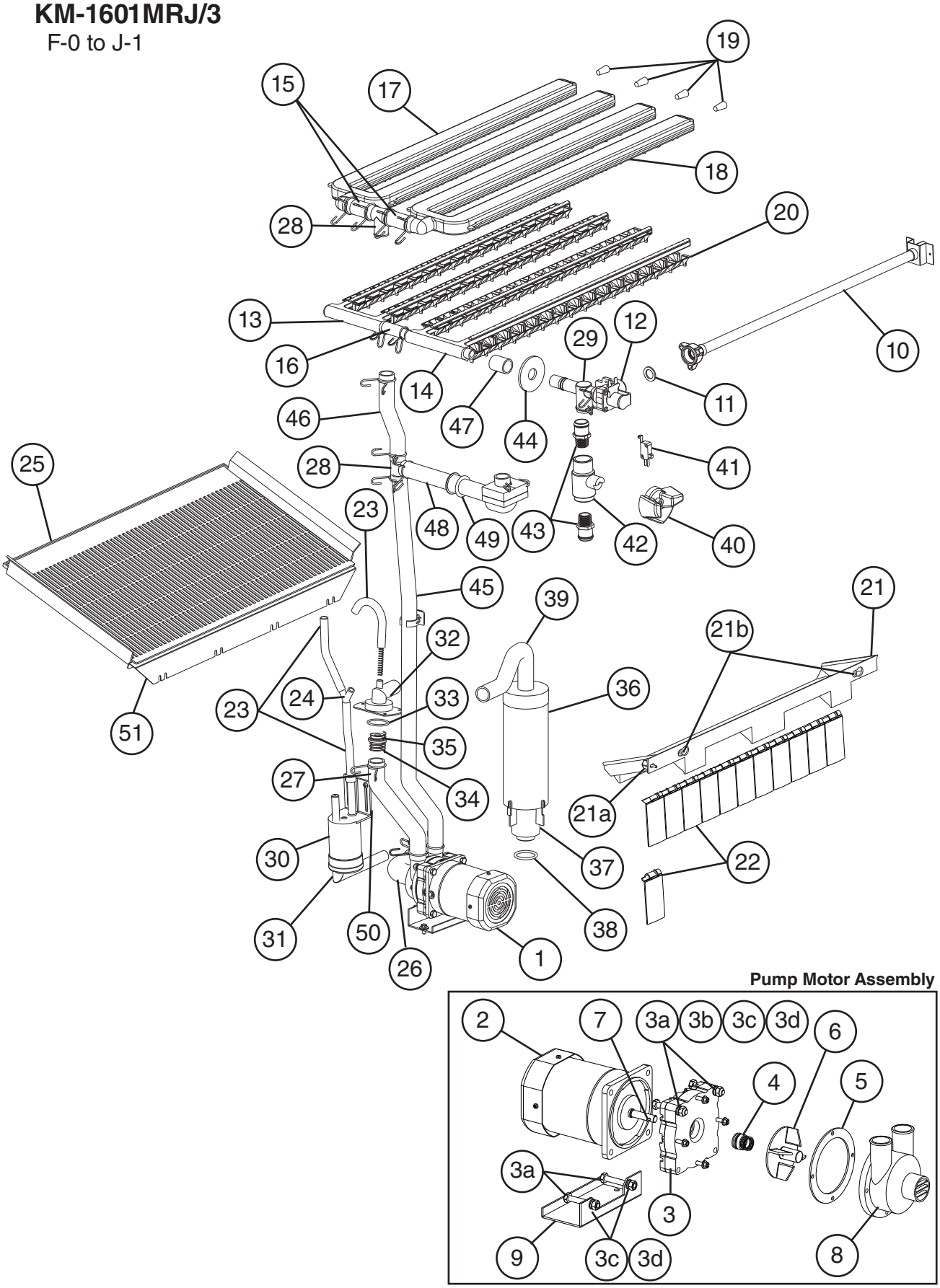

Title: B. Water Circuit Model: KM-1601MRJ/3												
				Required Number								
Index No.	Description	Material or Model Number	Part Number	F-0 G-0	H-0 (B) to J-1							
1	Pump Motor Assembly (includes items 2 through 8b)		215693A01	1	1							
2	Pump Motor		3A7682-01	1	1							
3	Pump Flange		215662-01	1	1							
3a	Hex Head Bolt	6×40	7B02-0640	4	4							
3b	Flat Washer		7W22-0600	4	4							
3c	Split Lock Washer		7L22-0600	4	4							
3d	Hex Nut		7N12-0600	4	4							
4	Mechanical Seal		4A3820-01	1	1							
5	Packing		428547-01	1	1							
6	Impeller		428548-01	1	1							
7	Pin		4A0648-01	1	1							
8	Pump Housing		212636-01	1	1							
9	Pump Motor Bracket		435057-01	1	1							
10	Water Supply Pipe		4A5216G04	1	1							
11	Rubber Gasket		413854-03	1	1							
12	Inlet Water Valve		3U0111-01	1	1							
13	Left Water Supply Tube		2A0079-01	1	1							
14	Right Water Supply Tube		2A0079-02	1	1							
15	Vinyl Hose	L=60 mm	7716-2025	2	2							
16	Vinyl Hose	L=50 mm	7716-1519	1	1							
17	Left Spray Tube		1A0260-02	1	1							
18	Right Spray Tube		1A0260-01	1	1							
19	Plug		4A0176-01	4	4							
20	Spray Guide		2A4282-02	4	4							
21	Cube Guide B		322644-02	1	-							
			3A9745-01		1							
21a	Thumbscrew		415949G12	1	1							
21b	Collar		435269-01	2	2							
22	Separator		3A9811-01		13							
23	Silicone Hose	L=130 mm	7730I3812	3	3							
24	Connector Tee		432763-01	1	1							
25	Cube Guide A		214905-01	1	1							
26	Hose A (inlet)		435091-01	1	1							
27	Hose B		435092-01	1	1							
28	Distributor Tee		432426-01	2	2							
29	Distributor B		4A0177-01	1	1							
30	Float Switch		4A3624-01	1	1							
31	Float Switch Connector		426799-01	1	1							
32	Drain Valve Housing		435054-01	1	1							
33	Drain Valve Seat		433705-01	1	1							
34	Drain Valve Spring		322685-01	1	1							
35	Drain Valve O-Ring		7611-G035	1	1							
36	Overflow Cap		322816-01	1	1							
37	Overflow Pipe		322691-01	1	1							
38	O-Ring		4A1234-01	1	1							
39	Hose C		326655-01	1	1							

Title: B. Water Circuit Model: KM-1601MRJ/3												
				Required Number								
Index No.	Description	Material or Model Number	Part Number	F-0 G-0	H-0 (B) to J-1							
40	Cleaning Valve Handle		215383-01	1	1							
41	Cleaning Valve Microswitch		4A2546-01	1	1							
42	Cleaning Valve Ball Valve	S-0761	439293-01	1	1							
43	Cleaning Valve Male Adaptor		325826-01	2	2							
44	Flange		439267-01	1	1							
45	Vinyl Hose	L=700 mm	7716-2025	1	1							
46	Vinyl Hose	L=165 mm	7716-2025	1	1							
47	Vinyl Hose	L=30 mm	7716-2025	1	1							
48	Bypass Hose		439265-01	1	1							
49	Rubber Ring		439236-01	1	1							
50	Float Switch Stop		3A9640-01		1							
51	Cube Guide Plate		3A0133-01	1	1							
Hose Clamps												
	Hose Clamp	25 mm	427443-03	12	12							
	Hose Clamp	18 mm	427443-05	3	3							
	Hose Clamp	27 mm	427443-08	2	2							

C. Control Box Assembly

KM-1601MRJ/3

F-0 to J-1

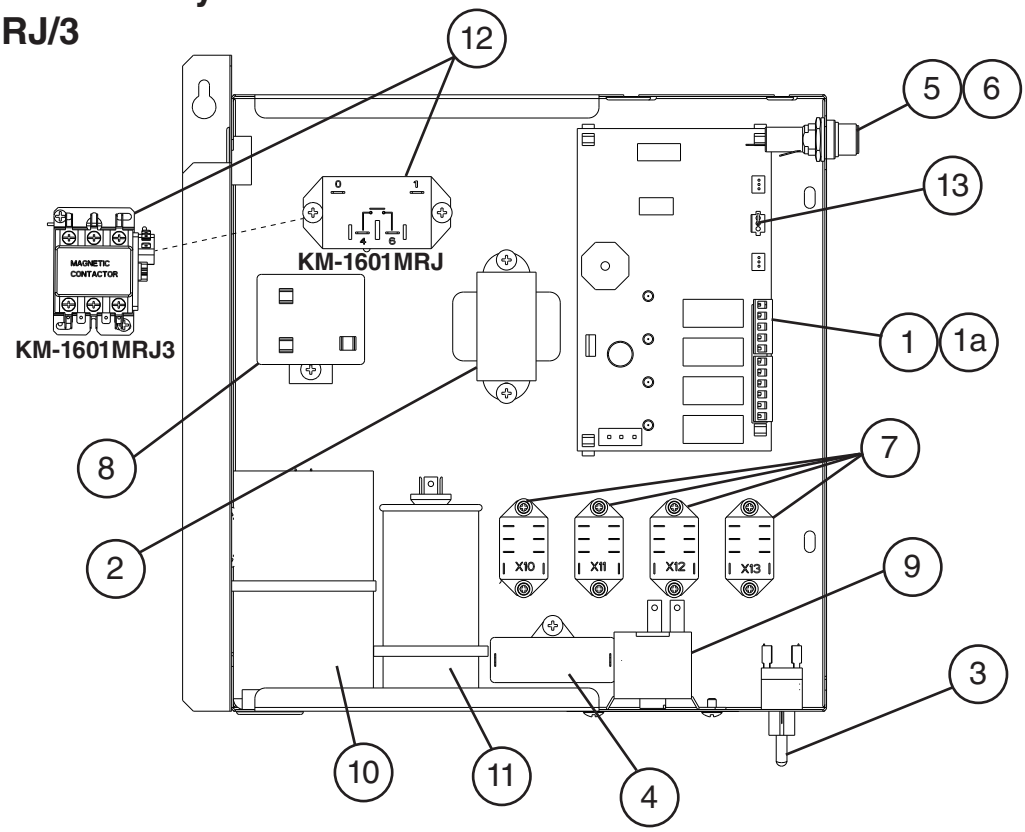

Title: C. Control Box Assembly Model: KM-1601MRJ/3												
				Required Number								
Index No.	Description	Material or Model Number	Part Number	F-0 J-0 (F)	J-0 (G) to J-1							
1	Control Board		2A7664-04	1	1							
1a	Control Board Support		4A0336-03	4	4							
2	Control Transformer		3A0172-01	1	1							
3	Control Switch		443119-01	1	1							
4	Pump Motor Capacitor	10MFD, 250VAC	443192-01	1	-							
			4A6435-01		1							
5	Fuse Holder		4A5443-01	1	1							
6	Fuse	10A, 250VAC	4A0893-07	1	1							
7	Relay (X10 = Pump Direction X11 = X10 Control X12 = Anti-Slush Control X13 = Crankcase Heater)		406132-07	4	4							
8	Start Relay		4A1107-09	1	1							
9	Bin Control Thermostat		4A2879-02	1	1							
10	Start Capacitor	**KM-1601MRJ** 145-174MFD, 250VAC	3A0076-01	1	1							
11	Run Capacitor	**KM-1601MRJ** 35MFD, 370VAC	3A2005-05	1	1							
12	Compressor Relay	**KM-1601MRJ**	4A3140-01	1	1							
	Magnetic Contactor	**KM-1601MRJ3**	4A0794-01	1	1							
13	Jumper Connector		4A4883G01	1	1							

D. Accessories and Labels
KM-1601MRJ/3
F-0 to J-1

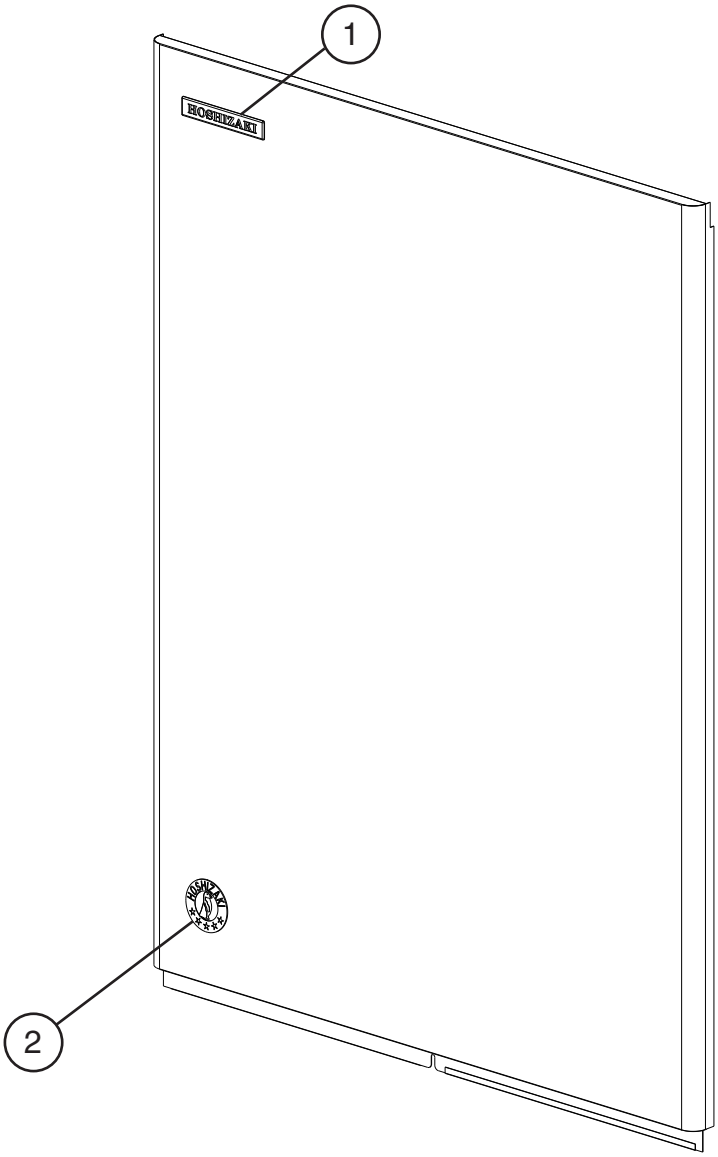

Title: D. Accessories and Labels Model: KM-1601MRJ/3												
				Required Number								
Index No.	Description	Material or Model Number	Part Number	F-0 to J-1								
1	HOSHIZAKI Emblem Label		4A0560-01	1								
2	Penguin Label		475552L02	1								
3	Universal Brace		4A0363-01	2								
3a	Hex Head Bolt	5×12, SS	7B02-0512	2								