Goodman
Air Conditioning & Heating

GSX14

Cooling Capacity : 18,000 - 60,000 BTU/h

Energy-Efficient Split System Air Conditioner Up to 15 SEER & 12.5 EER

Contents

Nomenclature 2
Product Specifications 3
Expanded Cooling Data 5
Performance Data 31
Wiring Diagrams 34
Dimensions 38
Accessories 38

Standard Features

- Energy-efficient compressor
- Single-speed condenser fan motor
- Factory-installed filter drier
- Copper tube/aluminum fin coil
- Service valves with sweat connections and easy-access gauge ports
- Contactor with lug connection
- Ground lug connection
- AHRI Certified; ETL Listed

Cabinet Features

- Heavy-gauge galvanized-steel cabinet with a louvered sound control top
- Attractive Architectural Gray powder-paint finish with 500-hour salt-spray approval
- Steel louver coil guard
- Top and side maintenance access
- Single-panel access to controls with space provided for field-installed accessories
- When properly anchored, meets the 2017 Florida Building Code unit integrity requirements for hurricane-type winds (Anchor bracket kits available.)

10 YEAR PARTS LIMITED WARRANTY* | 2 YEAR UNIT REPLACEMENT LIMITED WARRANTY*

AHRI CERTIFIED® www.ahricertified.org

Intertek

COMPANY WITH QUALITY SYSTEM CERTIFIED BY DNV GL = ISO 9001 =

COMPANY WITH ENVIRONMENTAL SYSTEM CERTIFIED BY DNV GL = ISO 14001 =

BBB ACCREDITED BUSINESS

* Complete warranty details available from your local dealer or at www.goodmanmfg.com. To receive the 2-Year Unit Replacement Limited Warranty and 10-Year Parts Limited Warranty, online registration must be completed within 60 days of installation. Online registration is not required in California or Quebec.

G	S	X	14	036	1	AA
1	2	3	4,5	6,7,8	9	10,11

Brand

G Goodman® Brand

Product Category

S Split System

Unit Type

X Condenser R-410A

Z Heat Pump R-410A

Efficiency

13	13 SEER	16	16 SEER
14	14 SEER	18	18 SEER

Capacity

018- 1½ tons	030- 2½ tons	042 3½ Tons
019- 1½ tons	031- 2½ tons	043 3½ Tons
024- 2 tons	036- 3 tons	048 4 Tons
025- 2 tons	037- 3 tons	060 5 Tons

Electrical

1- 208/230 V, 1 Phase, 60 Hz

Engineering *

Major & Minor revisions

* Not used for inventory control.

	GSX14 0181M*	GSX14 0191K*	GSX14 0241L*	GSX14 0251L*	GSX14 0301K*	GSX14 0301N*	GSX14 0311K*
CAPACITIES							
Max Cooling (BTU/h)	18,000	18,000	24,000	24,000	30,000	30,000	30,000
SEER/EER	14 / 11.5	14 / 12.2	14 / 12	14 / 12.2	14/12.0	14/11.5	14 / 12.2
Decibels	75	71	74	71	72	73	72
COMPRESSOR							
RLA	6.0	9.0	7.7	13.5	12.8	12.1	12.8
LRA	37.5	47.5	38.0	58.3	64	55	67.8
Type	Rotary	Scroll	Rotary	Scroll	Scroll	Rotary	Scroll
CONDENSER FAN MOTOR							
Hp	1/8	1/8	1/8	1/8	1/6	1/6	1/6
FLA	0.65	0.7	0.7	0.7	0.95	0.95	0.95
REFRIGERATION SYSTEM							
Refrigerant Line Size [1]							
Liquid Line Size (“O.D.)	⅜"	⅜"	⅜"	⅜"	⅜"	⅜"	⅜"
Suction Line Size (“O.D.)	¾"	¾"	¾"	¾"	¾"	¾"	¾"
Refrigerant Connection Size							
Liquid Valve Size (“O.D.)	⅜"	⅜"	⅜"	⅜"	⅜"	⅜"	⅜"
Suction Valve Size (“O.D.) [2] [3]	¾"	¾"	¾"	¾"	¾"	¾"	¾"
Valve Type	Sweat	Sweat	Sweat	Sweat	Sweat	Sweat	Sweat
Charge	68	68	72	75	80	78	90
Included piston:	0.051	0.053	0.057	0.057	0.065	0.067	0.063
ELECTRICAL DATA							
Voltage-Phase (60 Hz)	208/230-1	208/230-1	208/230-1	208/230-1	208/230-1	208/230-1	208/230-1
Minimum Circuit Ampacity [4]	8.2	12	10.3	17.6	17.0	16.1	17.0
Max. Overcurrent Protection [5]	15 amps	20 amps	15 amps	30 amps	25 amps	25 amps	25 amps
Min/Max Volts	197/253	197/253	197/253	197/253	197/253	197/253	197/253
Conduit	½" or ¾"	½" or ¾"	½" or ¾"	½" or ¾"	½" or ¾"	½" or ¾"	½" or ¾"
EQUIPMENT WEIGHT	102	131	126	136	162	161	162
SHIPPING WEIGHT	117	146	141	153	180	179	180

[1] Line sizes denoted for 25’ line sets, tested and rated in accordance with AHRI Standard 210/240.
For other line-set lengths or sizes, refer to the installation & Operating instructions and/or the long line-set guidelines.

[2] Installer will need to supply ¾” to ⅞” adapters for suction line connections.

[3] Installer will need to supply ⅞” to 1⅛” adapters for suction line connections.

[4] Wire size should be determined in accordance with National Electrical Codes; extensive wire runs will require larger wire sizes

[5] Must use time-delay fuses or HACR-type circuit breakers of the same size as noted.

NOTES

- Always check the S&R plate for electrical data on the unit being installed.
- Unit is charged with refrigerant for 15’ of ⅜” liquid line. System charge must be adjusted per Installation Instructions Final Charge Procedure.

	GSX14 0361K*	GSX14 0371K*	GSX14 0421K*	GSX14 0431K*	GSX14 0481K*	GSX14 0601K*
CAPACITIES						
Nom Cool (BTU/h)	36,000	36,000	42,000	42,000	48,000	60,000
SEER/EER	14 / 12	14 / 12.2	14 / 12	14 / 12.2	14 / 11.7	14 / 11.7
Decibels	73	73	73	73	74	75
COMPRESSOR						
RLA	14.1	14.1	16.7	16.7	19.9	25.0
LRA	77	72.2	79	79	109	134
Type	Scroll	Scroll	Scroll	Scroll	Scroll	Scroll
CONDENSER FAN MOTOR						
Hp	1/6	1/6	1/6	1/6	1/4	1/4
FLA	0.95	0.95	0.95	0.95	1.3	1.3
REFRIGERATION SYSTEM						
Refrigerant Line Size [1]						
Liquid Line Size (“O.D.)	⅜"	⅜"	⅜"	⅜"	⅜"	⅜"
Suction Line Size (“O.D.)	⅞"	⅞"	1⅛"	1⅛"	1⅛"	1⅛"
Refrigerant Connection Size						
Liquid Valve Size (“O.D.)	⅜"	⅜"	⅜"	⅜"	⅜"	⅜"
Suction Valve Size (“O.D.) [2] [3]	¾"	¾"	⅞"	⅞"	⅞"	⅞"
Valve Type	Sweat	Sweat	Sweat	Sweat	Sweat	Sweat
Charge	81	81	93	93	101	120
Included piston:	0.068	0.071	0.074	0.074	0.078	0.088
ELECTRICAL DATA						
Voltage-Phase (60 Hz)	208/230-1	208/230-1	208/230-1	208/230-1	208/230-1	208/230-1
Minimum Circuit Ampacity [4]	18.6	18.6	21.8	21.8	26.2	32.6
Max. Overcurrent Protection [5]	30 amps	30 amps	35 amps	35 amps	45 amps	50 amps
Min/Max Volts	197/253	197/253	197/253	197/253	197/253	197/253
Conduit	½" or ¾"	½" or ¾"	½" or ¾"	½" or ¾"	½" or ¾"	½" or ¾"
EQUIPMENT WEIGHT	162	162	189	189	220	260
SHIPPING WEIGHT	180	180	207	207	242	280

1 Line sizes denoted for 25’ line sets, tested and rated in accordance with AHRI Standard 210/240.
For other line-set lengths or sizes, refer to the installation & Operating instructions and/or the long line-set guidelines.

2 Installer will need to supply ¾” to ⅞” adapters for suction line connections.

3 Installer will need to supply ⅞” to 1⅛” adapters for suction line connections.

4 Wire size should be determined in accordance with National Electrical Codes; extensive wire runs will require larger wire sizes

5 Must use time-delay fuses or HACR-type circuit breakers of the same size as noted.

NOTES

- Always check the S&R plate for electrical data on the unit being installed.
- Unit is charged with refrigerant for 15’ of ⅜” liquid line. System charge must be adjusted per Installation Instructions Final Charge Procedure.

			Outdoor Ambient Temperature																							
			65				75				85				95				105				115			
			Entering Indoor Wet Bulb Temperature																							
IDB	Airflow		59	63	67	71	59	63	67	71	59	63	67	71	59	63	67	71	59	63	67	71	59	63	67	71
70	525	MBh	18.3	18.6	19.1	-	18.1	18.4	19.0	-	17.7	17.9	18.5	-	16.8	17.1	17.7	-	15.8	16.1	16.6	-	14.9	15.2	15.7	-
		S/T	0.61	0.53	0.39	-	0.61	0.54	0.40	-	0.64	0.56	0.43	-	1.00	0.58	0.45	-	1.00	0.60	0.47	-	1.00	0.65	0.52	-
		ΔT	18	17	13	-	18	17	13	-	18	17	14	-	18	17	13	-	18	16	13	-	19	17	14	-
		KW	0.97	0.97	0.97	-	1.07	1.07	1.07	-	1.18	1.17	1.17	-	1.29	1.29	1.29	-	1.42	1.42	1.42	-	1.58	1.57	1.57	-
		Amps	3.3	3.3	3.3	-	3.8	3.8	3.8	-	4.3	4.3	4.3	-	4.8	4.8	4.8	-	5.4	5.4	5.4	-	6.1	6.1	6.1	-
		HI PR	249	250	251	-	288	289	291	-	329	330	332	-	373	374	376	-	421	422	424	-	472	473	474	-
		LO PR	125	127	130	-	133	135	138	-	140	141	144	-	145	147	150	-	151	152	156	-	158	159	163	-
	600	MBh	18.6	18.8	19.4	-	18.4	18.6	19.2	-	17.9	18.2	18.7	-	17.1	17.3	17.9	-	16.1	16.3	16.9	-	15.2	15.4	16.0	-
		S/T	0.67	0.59	0.45	-	0.67	0.60	0.46	-	0.70	0.62	0.49	-	1.00	0.64	0.51	-	1.00	0.66	0.53	-	1.00	0.71	0.58	-
		ΔT	17	16	12	-	17	16	12	-	17	16	13	-	17	15	12	-	17	15	12	-	18	16	13	-
		KW	0.98	0.98	0.97	-	1.07	1.07	1.07	-	1.18	1.18	1.18	-	1.30	1.30	1.29	-	1.43	1.43	1.42	-	1.58	1.58	1.58	-
		Amps	3.4	3.4	3.3	-	3.8	3.8	3.8	-	4.3	4.3	4.3	-	4.8	4.8	4.8	-	5.4	5.4	5.4	-	6.1	6.1	6.1	-
		HI PR	251	252	253	-	290	291	293	-	331	332	334	-	375	376	378	-	423	424	426	-	474	475	477	-
		LO PR	127	129	132	-	135	136	140	-	142	143	146	-	147	149	152	-	153	154	158	-	160	161	164	-
	675	MBh	18.8	19.1	19.6	-	18.7	18.9	19.5	-	18.2	18.5	19.0	-	17.4	17.6	18.2	-	16.4	16.6	17.2	-	15.5	15.7	16.3	-
		S/T	0.70	0.62	0.49	-	0.71	0.63	0.49	-	1.00	0.66	0.52	-	1.00	0.68	0.54	-	1.00	0.70	0.56	-	1.00	0.75	0.61	-
		ΔT	16	15	12	-	16	15	11	-	17	15	12	-	16	15	11	-	16	14	11	-	17	15	12	-
		KW	0.98	0.98	0.98	-	1.08	1.08	1.07	-	1.18	1.18	1.18	-	1.30	1.30	1.30	-	1.43	1.43	1.43	-	1.58	1.58	1.58	-
		Amps	3.4	3.4	3.4	-	3.8	3.8	3.8	-	4.3	4.3	4.3	-	4.8	4.8	4.8	-	5.4	5.4	5.4	-	6.1	6.1	6.1	-
		HI PR	253	254	255	-	292	293	295	-	333	334	336	-	377	378	380	-	425	426	428	-	476	477	479	-
		LO PR	129	131	134	-	137	138	142	-	144	145	148	-	149	151	154	-	155	156	160	-	162	163	167	-
75	525	MBh	18.3	18.6	19.1	20.0	18.2	18.4	19.0	19.8	17.7	17.9	18.5	19.3	16.9	**17.1**	17.7	18.5	15.9	16.1	16.7	17.5	14.9	15.2	15.7	16.6
		S/T	0.74	0.66	0.52	0.38	0.74	0.67	0.53	0.39	1.00	0.69	0.56	0.41	1.00	**0.71**	0.57	0.43	1.00	0.73	0.60	0.45	1.00	1.00	0.65	0.51
		ΔT	22	20	17	14	22	20	17	14	22	20	17	14	22	**20**	17	14	22	20	17	14	23	21	18	15
		KW	0.97	0.97	0.97	0.98	1.07	1.07	1.06	1.07	1.17	1.17	1.17	1.18	1.29	**1.29**	1.29	1.30	1.42	1.42	1.42	1.43	1.57	1.57	1.57	1.58
		Amps	3.3	3.3	3.3	3.4	3.8	3.8	3.8	3.8	4.3	4.3	4.3	4.3	4.8	**4.8**	4.8	4.8	5.4	5.4	5.4	5.4	6.1	6.1	6.1	6.1
		HI PR	249	250	252	256	288	289	291	295	329	330	332	336	373	**374**	376	380	421	422	424	428	472	473	475	479
		LO PR	125	127	130	136	133	135	138	143	140	141	145	150	145	**147**	150	156	151	153	156	161	158	159	163	168
	600	MBh	18.6	18.8	19.4	20.2	18.4	18.7	19.2	20.0	17.9	18.2	18.7	19.6	17.1	**17.4**	17.9	18.7	16.1	16.4	16.9	17.7	15.2	15.4	16.0	16.8
		S/T	0.80	0.72	0.58	0.44	1.00	0.73	0.59	0.45	1.00	0.75	0.62	0.47	1.00	**0.77**	0.63	0.49	1.00	0.79	0.66	0.51	1.00	1.00	0.71	0.57
		ΔT	21	19	16	13	21	19	16	13	21	19	16	13	21	**19**	16	13	21	19	16	13	22	20	17	14
		KW	0.98	0.97	0.97	0.98	1.07	1.07	1.07	1.08	1.18	1.18	1.18	1.18	1.30	**1.30**	1.29	1.30	1.43	1.43	1.42	1.43	1.58	1.58	1.58	1.58
		Amps	3.4	3.4	3.3	3.4	3.8	3.8	3.8	3.8	4.3	4.3	4.3	4.3	4.8	**4.8**	4.8	4.8	5.4	5.4	5.4	5.4	6.1	6.1	6.1	6.1
		HI PR	251	252	254	258	290	291	293	297	331	332	334	338	375	**376**	378	383	423	424	426	430	474	475	477	481
		LO PR	127	129	132	137	135	136	140	145	142	143	146	152	147	**149**	152	157	153	154	158	163	160	161	165	170
	675	MBh	18.9	19.1	19.7	20.5	18.7	18.9	19.5	20.3	18.2	18.5	19.0	19.9	17.4	**17.6**	18.2	19.0	16.4	16.6	17.2	18.0	15.5	15.7	16.3	17.1
		S/T	0.83	0.75	0.62	0.47	1.00	0.76	0.62	0.48	1.00	0.78	0.65	0.51	1.00	**0.80**	0.67	0.53	1.00	1.00	0.69	0.55	1.00	1.00	0.74	0.60
		ΔT	20	18	15	12	20	18	15	12	20	19	15	12	20	**18**	15	12	20	18	15	12	21	19	16	13
		KW	0.98	0.98	0.98	0.98	1.08	1.08	1.07	1.08	1.18	1.18	1.18	1.19	1.30	**1.30**	1.30	1.31	1.43	1.43	1.43	1.44	1.58	1.58	1.58	1.59
		Amps	3.4	3.4	3.4	3.4	3.8	3.8	3.8	3.8	4.3	4.3	4.3	4.3	4.8	**4.8**	4.8	4.9	5.4	5.4	5.4	5.5	6.1	6.1	6.1	6.2
		HI PR	253	254	256	260	292	293	295	299	333	334	336	340	377	**379**	380	385	425	426	428	432	476	477	479	483
		LO PR	129	131	134	139	137	139	142	147	144	145	148	154	149	**151**	154	159	155	156	160	165	162	163	167	172

IDB: Entering Indoor Dry Bulb Temperature

Shaded area reflects ACCA (TVA) conditions

kW = Total system power

High and low pressures are measured at the liquid and suction service valves.

Amps = outdoor unit amps (comp.+fan)

EXPANDED COOLING DATA — GSX140181M* + CA*FA2422*6A* + EEP (CONT.)

			Outdoor Ambient Temperature																							
			65				75				85				95				105				115			
			Entering Indoor Wet Bulb Temperature																							
IDB	Airflow		59	63	67	71	59	63	67	71	59	63	67	71	59	63	67	71	59	63	67	71	59	63	67	71
80	525	MBh	18.4	18.7	19.2	20.1	18.3	18.5	19.1	19.9	17.8	18.0	18.6	19.4	17.0	17.2	17.8	18.6	15.9	16.2	16.8	17.6	15.0	15.3	15.8	16.7
		S/T	1.00	0.79	0.65	0.5	1.00	0.79	0.66	0.51	1.00	0.82	0.68	0.5	1.00	1.00	0.70	0.56	1.00	1.00	0.72	0.6	1.00	1.00	0.77	0.63
		ΔT	26	24	21	18	26	24	21	18	26	24	21	18	26	24	21	18	25	24	21	17	26	25	22	18
		KW	0.97	0.97	0.97	1.0	1.07	1.07	1.06	1.07	1.18	1.17	1.17	1.2	1.29	1.29	1.29	1.30	1.42	1.42	1.42	1.4	1.58	1.57	1.57	1.58
		Amps	3.3	3.3	3.3	3.4	3.8	3.8	3.8	3.8	4.3	4.3	4.3	4.3	4.8	4.8	4.8	4.8	5.4	5.4	5.4	5.4	6.1	6.1	6.1	6.1
		HI PR	249	250	252	256	288	289	291	296	329	331	332	337	374	375	377	381	421	422	424	429	472	473	475	479
		LO PR	126	128	131	136	134	135	138	144	140	142	145	150	146	148	151	156	152	153	156	162	158	160	163	169
	600	MBh	18.7	18.9	19.5	20.3	18.5	18.8	19.3	20.1	18.0	18.3	18.8	19.7	17.2	17.5	**18.0**	18.8	16.2	16.4	17.0	17.8	15.3	15.5	16.1	16.9
		S/T	1.00	0.85	0.71	0.6	1.00	0.85	0.72	0.57	1.00	0.88	0.74	0.6	1.00	1.00	**0.76**	0.62	1.00	1.00	0.78	0.6	1.00	1.00	0.83	0.69
		ΔT	25	23	20	17	25	23	20	17	25	23	20	17	25	23	**20**	17	24	23	20	16	25	24	21	17
		KW	0.98	0.98	0.97	1.0	1.07	1.07	1.07	1.08	1.18	1.18	1.18	1.2	1.30	1.30	**1.29**	1.30	1.43	1.43	1.42	1.4	1.58	1.58	1.58	1.59
		Amps	3.4	3.4	3.3	3.4	3.8	3.8	3.8	3.8	4.3	4.3	4.3	4.3	4.8	4.8	**4.8**	4.9	5.4	5.4	5.4	5.4	6.1	6.1	6.1	6.1
		HI PR	251	252	254	258	291	292	293	298	332	333	334	339	376	377	**379**	383	424	425	426	431	474	476	477	482
		LO PR	128	129	133	138	135	137	140	146	142	144	147	152	148	149	**153**	158	153	155	158	163	160	162	165	170
	675	MBh	18.9	19.2	19.8	20.6	18.8	19.0	19.6	20.4	18.3	18.6	19.1	19.9	17.5	17.7	18.3	19.1	16.5	16.7	17.3	18.1	15.6	15.8	16.4	17.2
		S/T	1.00	0.88	0.74	0.6	1.00	0.89	0.75	0.61	1.00	1.00	0.77	0.6	1.00	1.00	0.79	0.65	1.00	1.00	0.82	0.7	1.00	1.00	1.00	0.72
		ΔT	24	22	19	16	24	22	19	16	24	22	19	16	24	22	19	16	24	22	19	15	25	23	20	16
		KW	0.98	0.98	0.98	1.0	1.08	1.08	1.07	1.08	1.18	1.18	1.18	1.2	1.30	1.30	1.30	1.31	1.43	1.43	1.43	1.4	1.58	1.58	1.58	1.59
		Amps	3.4	3.4	3.4	3.4	3.8	3.8	3.8	3.8	4.3	4.3	4.3	4.3	4.8	4.8	4.8	4.9	5.4	5.4	5.4	5.5	6.1	6.1	6.1	6.2
		HI PR	253	254	256	261	293	294	295	300	334	335	336	341	378	379	381	385	426	427	428	433	476	478	479	484
		LO PR	130	131	135	140	138	139	142	148	144	146	149	154	150	151	155	160	155	157	160	165	162	164	167	172
85	525	MBh	18.7	19.0	19.5	20.4	18.6	18.8	19.4	20.2	18.1	18.3	18.9	19.7	17.3	17.5	18.1	18.9	16.3	16.5	17.1	17.9	15.3	15.6	16.1	17.0
		S/T	1.00	0.89	0.75	0.61	1.00	1.00	0.76	0.61	1.00	1.00	0.78	0.64	1.00	1.00	0.80	0.66	1.00	1.00	0.82	0.68	1.00	1.00	1.00	0.73
		ΔT	29	27	24	21	29	27	24	21	29	28	24	21	29	27	24	21	29	27	24	21	30	28	25	22
		KW	0.97	0.97	0.97	0.98	1.07	1.07	1.07	1.07	1.18	1.18	1.17	1.18	1.29	1.29	1.29	1.30	1.42	1.42	1.42	1.43	1.58	1.58	1.57	1.58
		Amps	3.3	3.3	3.3	3.4	3.8	3.8	3.8	3.8	4.3	4.3	4.3	4.3	4.8	4.8	4.8	4.8	5.4	5.4	5.4	5.4	6.1	6.1	6.1	6.1
		HI PR	250	251	253	258	290	291	292	297	331	332	333	338	375	376	378	382	423	424	425	430	473	475	476	481
		LO PR	128	129	133	138	136	137	140	146	142	144	147	152	148	149	153	158	153	155	158	163	160	162	165	170
	600	MBh	19.0	19.2	19.8	20.6	18.8	19.1	19.6	20.4	18.3	18.6	19.1	20.0	17.5	17.8	18.3	19.1	16.5	16.8	17.3	18.1	15.6	15.8	16.4	17.2
		S/T	1.00	0.95	0.81	0.67	1.00	1.00	0.82	0.67	1.00	1.00	0.84	0.70	1.00	1.00	0.86	0.72	1.00	1.00	1.00	0.74	1.00	1.00	1.00	0.79
		ΔT	28	26	23	20	28	26	23	20	28	27	23	20	28	26	23	20	28	26	23	20	29	27	24	21
		KW	0.98	0.98	0.98	0.98	1.07	1.07	1.07	1.08	1.18	1.18	1.18	1.19	1.30	1.30	1.30	1.30	1.43	1.43	1.43	1.43	1.58	1.58	1.58	1.59
		Amps	3.4	3.4	3.4	3.4	3.8	3.8	3.8	3.8	4.3	4.3	4.3	4.3	4.8	4.8	4.8	4.9	5.4	5.4	5.4	5.5	6.1	6.1	6.1	6.2
		HI PR	252	254	255	260	292	293	295	299	333	334	336	340	377	378	380	384	425	426	428	432	476	477	478	483
		LO PR	130	131	134	140	137	139	142	147	144	146	149	154	150	151	154	160	155	157	160	165	162	164	167	172
	675	MBh	19.3	19.5	20.1	20.9	19.1	19.4	19.9	20.7	18.6	18.9	19.4	20.3	17.8	18.1	18.6	19.4	16.8	17.0	17.6	18.4	15.9	16.1	16.7	17.5
		S/T	1.00	0.98	0.84	0.70	1.00	1.00	0.85	0.71	1.00	1.00	0.88	0.73	1.00	1.00	0.90	0.75	1.00	1.00	1.00	0.77	1.00	1.00	1.00	0.83
		ΔT	27	25	22	19	27	25	22	19	27	26	23	19	27	25	22	19	27	25	22	19	28	26	23	20
		KW	0.98	0.98	0.98	0.99	1.08	1.08	1.08	1.08	1.19	1.19	1.18	1.19	1.30	1.30	1.30	1.31	1.43	1.43	1.43	1.44	1.59	1.59	1.58	1.59
		Amps	3.4	3.4	3.4	3.4	3.8	3.8	3.8	3.9	4.3	4.3	4.3	4.3	4.9	4.9	4.8	4.9	5.5	5.4	5.4	5.5	6.2	6.1	6.1	6.2
		HI PR	255	256	257	262	294	295	297	301	335	336	338	342	379	380	382	386	427	428	430	434	478	479	480	485
		LO PR	132	133	137	142	139	141	144	149	146	148	151	156	152	153	156	162	157	159	162	167	164	166	169	174

IDB: Entering Indoor Dry Bulb Temperature

Shaded area reflects AHRI conditions

kW = Total system power

High and low pressures are measured at the liquid and suction service valves.

Amps = outdoor unit amps (comp.+fan)

			Outdoor Ambient Temperature																							
			65				75				85				95				105				115			
			Entering Indoor Wet Bulb Temperature																							
IDB	Airflow		59	63	67	71	59	63	67	71	59	63	67	71	59	63	67	71	59	63	67	71	59	63	67	71
70	550	MBh	18.1	18.4	18.9	-	18.0	18.2	18.8	-	17.5	17.8	18.3	-	16.7	17.0	17.5	-	15.7	16.0	16.5	-	14.8	15.1	15.6	-
		S/T	0.65	0.57	0.44	-	0.65	0.58	0.45	-	0.68	0.60	0.47	-	1.00	0.62	0.49	-	1.00	0.64	0.51	-	1.00	0.69	0.56	-
		ΔT	20	18	14	-	20	18	14	-	20	18	14	-	20	18	14	-	19	18	14	-	21	19	15	-
		KW	1.05	1.05	1.05	-	1.17	1.17	1.16	-	1.30	1.30	1.29	-	1.44	1.44	1.43	-	1.59	1.59	1.59	-	1.78	1.78	1.77	-
		Amps	3.9	3.9	3.9	-	4.4	4.4	4.4	-	5.0	5.0	5.0	-	5.7	5.7	5.6	-	6.4	6.4	6.4	-	7.2	7.2	7.2	-
		HI PR	240	241	242	-	277	278	280	-	316	318	319	-	359	360	362	-	404	405	407	-	453	454	456	-
		LO PR	125	126	129	-	132	134	137	-	139	140	143	-	144	146	149	-	150	151	154	-	156	158	161	-
	600	MBh	18.3	18.6	19.1	-	18.2	18.4	19.0	-	17.7	18.0	18.5	-	16.9	17.2	17.7	-	15.9	16.2	16.7	-	15.0	15.3	15.8	-
		S/T	0.67	0.60	0.47	-	0.68	0.61	0.47	-	0.70	0.63	0.50	-	1.00	0.65	0.52	-	1.00	0.67	0.54	-	1.00	0.72	0.59	-
		ΔT	19	17	13	-	19	17	13	-	19	17	14	-	19	17	13	-	19	17	13	-	20	18	14	-
		KW	1.05	1.05	1.05	-	1.17	1.17	1.17	-	1.30	1.30	1.30	-	1.44	1.44	1.44	-	1.60	1.60	1.59	-	1.78	1.78	1.78	-
		Amps	3.9	3.9	3.9	-	4.4	4.4	4.4	-	5.0	5.0	5.0	-	5.7	5.7	5.7	-	6.4	6.4	6.4	-	7.2	7.2	7.2	-
		HI PR	241	242	244	-	279	280	281	-	318	319	321	-	360	361	363	-	406	407	409	-	455	456	457	-
		LO PR	126	128	131	-	133	135	138	-	140	142	145	-	146	147	150	-	151	152	156	-	158	159	162	-
	675	MBh	18.7	18.9	19.5	-	18.5	18.8	19.3	-	18.1	18.3	18.9	-	17.3	17.5	18.1	-	16.3	16.5	17.1	-	15.4	15.6	16.2	-
		S/T	0.69	0.62	0.49	-	0.70	0.62	0.49	-	0.72	0.65	0.52	-	1.00	0.67	0.53	-	1.00	0.69	0.56	-	1.00	0.74	0.61	-
		ΔT	18	16	13	-	18	16	12	-	18	16	13	-	18	16	12	-	18	16	12	-	19	17	13	-
		KW	1.06	1.06	1.06	-	1.18	1.17	1.17	-	1.30	1.30	1.30	-	1.45	1.44	1.44	-	1.60	1.60	1.60	-	1.79	1.79	1.78	-
		Amps	3.9	3.9	3.9	-	4.5	4.5	4.5	-	5.1	5.1	5.0	-	5.7	5.7	5.7	-	6.4	6.4	6.4	-	7.3	7.3	7.2	-
		HI PR	243	244	246	-	281	282	283	-	320	321	323	-	362	363	365	-	408	409	411	-	457	458	459	-
		LO PR	128	130	133	-	136	137	141	-	142	144	147	-	148	149	153	-	153	155	158	-	160	162	165	-
75	550	MBh	18.2	18.4	18.9	19.8	18.0	18.2	18.8	19.6	17.5	17.8	18.3	19.1	16.7	**17.0**	17.5	18.3	15.7	16.0	16.5	17.3	14.8	15.1	15.6	16.4
		S/T	0.77	0.70	0.57	0.43	0.78	0.70	0.57	0.43	1.00	0.73	0.60	0.46	1.00	**0.75**	0.62	0.48	1.00	0.77	0.64	0.50	1.00	1.00	0.69	0.55
		ΔT	24	22	18	15	24	22	18	15	24	22	19	15	24	**22**	18	15	24	22	18	14	25	23	19	16
		KW	1.05	1.05	1.05	1.06	1.17	1.16	1.16	1.17	1.30	1.29	1.29	1.30	1.44	**1.43**	1.43	1.44	1.59	1.59	1.59	1.60	1.78	1.78	1.77	1.78
		Amps	3.9	3.9	3.9	3.9	4.4	4.4	4.4	4.4	5.0	5.0	5.0	5.0	5.7	**5.7**	5.6	5.7	6.4	6.4	6.4	6.4	7.2	7.2	7.2	7.2
		HI PR	240	241	243	247	277	278	280	284	317	318	319	324	359	**360**	362	366	405	406	407	411	453	454	456	460
		LO PR	125	126	129	134	132	134	137	142	139	140	143	148	144	**146**	149	154	150	151	154	159	156	158	161	166
	600	MBh	18.4	18.6	19.1	20.0	18.2	18.4	19.0	19.8	17.7	18.0	18.5	19.3	16.9	**17.2**	17.7	18.5	15.9	16.2	16.7	17.5	15.0	15.3	15.8	16.6
		S/T	0.80	0.73	0.59	0.45	1.00	0.73	0.60	0.46	1.00	0.76	0.62	0.48	1.00	**0.77**	0.64	0.50	1.00	0.80	0.66	0.53	1.00	1.00	0.71	0.58
		ΔT	23	21	18	14	23	21	18	14	24	22	18	14	23	**21**	18	14	23	21	17	14	24	22	19	15
		KW	1.05	1.05	1.05	1.06	1.17	1.17	1.17	1.18	1.30	1.30	1.30	1.31	1.44	**1.44**	1.44	1.45	1.60	1.60	1.59	1.60	1.78	1.78	1.78	1.79
		Amps	3.9	3.9	3.9	3.9	4.4	4.4	4.4	4.5	5.0	5.0	5.0	5.1	5.7	**5.7**	5.7	5.7	6.4	6.4	6.4	6.4	7.2	7.2	7.2	7.3
		HI PR	241	242	244	248	279	280	282	286	318	319	321	325	360	**361**	363	367	406	407	409	413	455	456	457	462
		LO PR	126	128	131	136	133	135	138	143	140	142	145	150	146	**147**	150	155	151	153	156	161	158	159	162	168
	675	MBh	18.7	19.0	19.5	20.3	18.5	18.8	19.3	20.2	18.1	18.3	18.9	19.7	17.3	**17.5**	18.1	18.9	16.3	16.5	17.1	17.9	15.4	15.6	16.2	17.0
		S/T	0.82	0.74	0.61	0.47	1.00	0.75	0.62	0.48	1.00	0.77	0.64	0.50	1.00	**0.79**	0.66	0.52	1.00	1.00	0.68	0.54	1.00	1.00	0.73	0.59
		ΔT	22	20	17	13	22	20	17	13	23	21	17	13	22	**20**	17	13	22	20	16	13	23	21	18	14
		KW	1.06	1.06	1.06	1.06	1.17	1.17	1.17	1.18	1.30	1.30	1.30	1.31	1.44	**1.44**	1.44	1.45	1.60	1.60	1.60	1.61	1.79	1.78	1.78	1.79
		Amps	3.9	3.9	3.9	4.0	4.5	4.5	4.4	4.5	5.1	5.0	5.0	5.1	5.7	**5.7**	5.7	5.7	6.4	6.4	6.4	6.4	7.3	7.3	7.2	7.3
		HI PR	244	245	246	250	281	282	284	288	320	321	323	327	363	**364**	365	369	408	409	411	415	457	458	460	464
		LO PR	128	130	133	138	136	137	141	146	142	144	147	152	148	**149**	153	158	153	155	158	163	160	162	165	170

IDB: Entering Indoor Dry Bulb Temperature

Shaded area reflects ACCA (TVA) conditions

kW = Total system power

High and low pressures are measured at the liquid and suction service valves.

Amps = outdoor unit amps (comp.+fan)

			Outdoor Ambient Temperature																							
			65				75				85				95				105				115			
			Entering Indoor Wet Bulb Temperature																							
IDB	Airflow		59	63	67	71	59	63	67	71	59	63	67	71	59	63	67	71	59	63	67	71	59	63	67	71
80	550	MBh	18.2	18.5	19.0	19.8	18.1	18.3	18.9	19.7	17.6	17.9	18.4	19.2	16.8	17.1	**17.6**	18.4	15.8	16.1	16.6	17.4	14.9	15.2	15.7	16.5
		S/T	1.00	0.82	0.69	0.6	1.00	0.83	0.69	0.56	1.00	0.85	0.72	0.6	1.00	1.00	**0.74**	0.60	1.00	1.00	0.76	0.6	1.00	1.00	0.81	0.67
		ΔT	28	26	23	19	28	26	23	19	29	27	23	19	28	26	**23**	19	28	26	22	19	29	27	24	20
		KW	1.05	1.05	1.05	1.1	1.17	1.17	1.16	1.17	1.30	1.30	1.29	1.3	1.44	1.44	**1.43**	1.44	1.59	1.59	1.59	1.6	1.78	1.78	1.77	1.78
		Amps	3.9	3.9	3.9	3.9	4.4	4.4	4.4	4.5	5.0	5.0	5.0	5.0	5.7	5.7	**5.6**	5.7	6.4	6.4	6.4	6.4	7.2	7.2	7.2	7.2
		HI PR	240	241	243	247	278	279	281	285	317	318	320	324	359	360	**362**	366	405	406	408	412	454	455	456	461
		LO PR	125	127	130	135	133	134	137	142	139	141	144	149	145	146	**149**	155	150	152	155	160	157	158	162	167
	600	MBh	18.4	18.7	19.2	20.0	18.3	18.5	19.1	19.9	17.8	18.1	18.6	19.4	17.0	17.3	17.8	18.6	16.0	16.3	16.8	17.6	15.1	15.4	15.9	16.7
		S/T	1.00	0.85	0.72	0.6	1.00	0.85	0.72	0.58	1.00	0.88	0.75	0.6	1.00	1.00	0.76	0.63	1.00	1.00	0.79	0.7	1.00	1.00	0.84	0.70
		ΔT	28	26	22	18	28	26	22	18	28	26	22	19	28	26	22	18	27	25	22	18	28	27	23	19
		KW	1.05	1.05	1.05	1.1	1.17	1.17	1.17	1.18	1.30	1.30	1.30	1.3	1.44	1.44	1.44	1.45	1.60	1.60	1.59	1.6	1.78	1.78	1.78	1.79
		Amps	3.9	3.9	3.9	3.9	4.4	4.4	4.4	4.5	5.0	5.0	5.0	5.1	5.7	5.7	5.7	5.7	6.4	6.4	6.4	6.4	7.2	7.2	7.2	7.3
		HI PR	242	243	244	249	279	280	282	286	319	320	321	325	361	362	364	368	406	408	409	413	455	456	458	462
		LO PR	127	128	131	136	134	136	139	144	141	142	145	150	146	148	151	156	152	153	156	161	158	160	163	168
	675	MBh	18.8	19.1	19.6	20.4	18.6	18.9	19.4	20.2	18.2	18.4	19.0	19.8	17.4	17.6	18.2	19.0	16.4	16.6	17.2	18.0	15.5	15.7	16.3	17.1
		S/T	1.00	0.86	0.73	0.6	1.00	0.87	0.74	0.60	1.00	0.89	0.76	0.6	1.00	1.00	0.78	0.64	1.00	1.00	0.80	0.7	1.00	1.00	0.85	0.71
		ΔT	27	25	21	17	27	25	21	17	27	25	21	18	27	25	21	17	26	24	21	17	28	26	22	18
		KW	1.06	1.06	1.06	1.1	1.18	1.17	1.17	1.18	1.30	1.30	1.30	1.3	1.45	1.44	1.44	1.45	1.60	1.60	1.60	1.6	1.79	1.78	1.78	1.79
		Amps	3.9	3.9	3.9	4.0	4.5	4.5	4.4	4.5	5.1	5.1	5.0	5.1	5.7	5.7	5.7	5.7	6.4	6.4	6.4	6.4	7.3	7.3	7.2	7.3
		HI PR	244	245	247	251	281	282	284	288	321	322	323	328	363	364	366	370	409	410	411	416	457	458	460	464
		LO PR	129	130	134	139	136	138	141	146	143	144	148	153	149	150	153	158	154	155	159	164	161	162	165	171
85	550	MBh	18.5	18.8	19.3	20.2	18.4	18.6	19.2	20.0	17.9	18.2	18.7	19.5	17.1	17.4	17.9	18.7	16.1	16.4	16.9	17.7	15.2	15.5	16.0	16.8
		S/T	1.00	0.92	0.79	0.65	1.00	1.00	0.79	0.65	1.00	1.00	0.82	0.68	1.00	1.00	0.84	0.70	1.00	1.00	0.86	0.72	1.00	1.00	1.00	0.77
		ΔT	32	30	27	23	32	30	27	23	32	30	27	23	32	30	27	23	32	30	26	23	33	31	27	24
		KW	1.05	1.05	1.05	1.06	1.17	1.17	1.17	1.17	1.30	1.30	1.30	1.30	1.44	1.44	1.44	1.44	1.60	1.59	1.59	1.60	1.78	1.78	1.78	1.79
		Amps	3.9	3.9	3.9	3.9	4.4	4.4	4.4	4.5	5.0	5.0	5.0	5.1	5.7	5.7	5.7	5.7	6.4	6.4	6.4	6.4	7.2	7.2	7.2	7.3
		HI PR	241	242	244	248	279	280	282	286	318	319	321	325	361	362	363	367	406	407	409	413	455	456	458	462
		LO PR	127	128	132	137	134	136	139	144	141	143	146	151	147	148	151	156	152	153	157	162	159	160	163	169
	600	MBh	18.7	19.0	19.5	20.4	18.6	18.8	19.4	20.2	18.1	18.4	18.9	19.7	17.3	17.6	18.1	18.9	16.3	16.6	17.1	17.9	15.4	15.7	16.2	17.0
		S/T	1.00	0.95	0.81	0.67	1.00	1.00	0.82	0.68	1.00	1.00	0.84	0.71	1.00	1.00	0.86	0.72	1.00	1.00	0.88	0.75	1.00	1.00	1.00	0.80
		ΔT	31	29	26	22	31	29	26	22	32	30	26	22	31	29	26	22	31	29	26	22	32	30	27	23
		KW	1.06	1.06	1.05	1.06	1.17	1.17	1.17	1.18	1.30	1.30	1.30	1.31	1.44	1.44	1.44	1.45	1.60	1.60	1.60	1.61	1.78	1.78	1.78	1.79
		Amps	3.9	3.9	3.9	3.9	4.5	4.4	4.4	4.5	5.0	5.0	5.0	5.1	5.7	5.7	5.7	5.7	6.4	6.4	6.4	6.4	7.2	7.2	7.2	7.3
		HI PR	243	244	246	250	280	281	283	287	320	321	322	327	362	363	365	369	408	409	410	414	456	457	459	463
		LO PR	128	130	133	138	136	137	141	146	142	144	147	152	148	149	153	158	153	155	158	163	160	162	165	170
	675	MBh	19.1	19.4	19.9	20.7	18.9	19.2	19.7	20.5	18.5	18.7	19.3	20.1	17.7	17.9	18.5	19.3	16.7	16.9	17.5	18.3	15.8	16.0	16.6	17.4
		S/T	1.00	0.96	0.83	0.69	1.00	1.00	0.84	0.70	1.00	1.00	0.86	0.72	1.00	1.00	0.88	0.74	1.00	1.00	1.00	0.76	1.00	1.00	1.00	0.81
		ΔT	30	28	25	21	30	28	25	21	31	29	25	21	30	28	25	21	30	28	25	21	31	29	26	22
		KW	1.06	1.06	1.06	1.07	1.18	1.18	1.17	1.18	1.31	1.31	1.30	1.31	1.45	1.45	1.44	1.45	1.60	1.60	1.60	1.61	1.79	1.79	1.79	1.79
		Amps	3.9	3.9	3.9	4.0	4.5	4.5	4.5	4.5	5.1	5.1	5.1	5.1	5.7	5.7	5.7	5.7	6.4	6.4	6.4	6.5	7.3	7.3	7.3	7.3
		HI PR	245	246	248	252	283	284	285	289	322	323	325	329	364	365	367	371	410	411	412	417	458	459	461	465
		LO PR	131	132	135	141	138	140	143	148	145	146	149	155	150	152	155	160	156	157	160	166	163	164	167	172

IDB: Entering Indoor Dry Bulb Temperature

Shaded area reflects AHRI conditions

kW = Total system power

High and low pressures are measured at the liquid and suction service valves.

Amps = outdoor unit amps (comp.+fan)

Expanded Cooling Data — GSX140241** + CA*F3636*6D*+TXV+HSK+EEP

			Outdoor Ambient Temperature																							
			65				75				85				95				105				115			
			Entering Indoor Wet Bulb Temperature																							
IDB	Airflow		59	63	67	71	59	63	67	71	59	63	67	71	59	63	67	71	59	63	67	71	59	63	67	71
70	725	MBh	22.1	22.9	25.1	-	21.6	22.3	24.5	-	21.0	21.8	23.9	-	20.5	21.3	23.3	-	19.5	20.2	22.2	-	18.1	18.7	20.5	-
		S/T	0.70	0.59	0.41	-	0.73	0.61	0.42	-	0.75	0.62	0.43	-	0.77	0.64	0.45	-	0.80	0.67	0.46	-	0.81	0.67	0.47	-
		ΔT	20	17	13	-	20	17	13	-	20	17	13	-	20	17	13	-	20	17	13	-	18	16	12	-
		KW	1.26	1.29	1.33	-	1.37	1.40	1.45	-	1.46	1.50	1.55	-	1.54	1.58	1.64	-	1.62	1.65	1.71	-	1.68	1.72	1.78	-
		Amps	5.5	5.6	5.8	-	5.9	6.1	6.2	-	6.4	6.6	6.8	-	6.8	7.0	7.2	-	7.3	7.4	7.7	-	7.7	7.9	8.1	-
		HI PR	217	233	246	-	243	262	276	-	277	298	314	-	315	339	358	-	354	381	403	-	391	421	445	-
		LO PR	106	113	123	-	112	119	130	-	117	124	135	-	122	130	142	-	128	136	149	-	133	141	154	-
	800	MBh	22.4	23.2	25.4	-	21.9	22.7	24.8	-	21.4	22.1	24.3	-	20.8	21.6	23.7	-	19.8	20.5	22.5	-	18.3	19.0	20.8	-
		S/T	0.73	0.61	0.42	-	0.76	0.64	0.44	-	0.78	0.65	0.45	-	0.81	0.67	0.47	-	0.84	0.70	0.48	-	0.84	0.70	0.49	-
		ΔT	19	16	12	-	19	17	13	-	19	17	13	-	19	17	13	-	19	16	12	-	18	15	12	-
		KW	1.27	1.30	1.34	-	1.37	1.41	1.46	-	1.47	1.50	1.56	-	1.55	1.59	1.65	-	1.63	1.66	1.72	-	1.69	1.73	1.79	-
		Amps	5.5	5.7	5.8	-	6.0	6.1	6.3	-	6.4	6.6	6.8	-	6.9	7.0	7.3	-	7.3	7.5	7.7	-	7.7	7.9	8.2	-
		HI PR	218	235	248	-	245	263	278	-	278	300	316	-	317	341	360	-	357	384	405	-	394	424	448	-
		LO PR	107	114	124	-	113	120	131	-	117	125	136	-	123	131	143	-	129	137	150	-	134	142	155	-
	900	MBh	22.8	23.7	25.9	-	22.3	23.1	25.3	-	21.8	22.6	24.7	-	21.3	22.0	24.1	-	20.2	20.9	22.9	-	18.7	19.4	21.2	-
		S/T	0.75	0.62	0.43	-	0.77	0.65	0.45	-	0.79	0.66	0.46	-	0.82	0.68	0.47	-	0.85	0.71	0.49	-	0.86	0.72	0.50	-
		ΔT	17	15	11	-	18	15	12	-	18	15	12	-	18	15	12	-	18	15	12	-	16	14	11	-
		KW	1.28	1.31	1.36	-	1.39	1.42	1.47	-	1.49	1.52	1.58	-	1.57	1.61	1.67	-	1.64	1.68	1.75	-	1.71	1.75	1.81	-
		Amps	5.6	5.7	5.9	-	6.0	6.2	6.4	-	6.5	6.7	6.9	-	7.0	7.1	7.3	-	7.4	7.6	7.8	-	7.8	8.0	8.3	-
		HI PR	221	238	251	-	248	267	282	-	282	304	321	-	321	346	365	-	361	389	411	-	399	430	454	-
		LO PR	108	115	126	-	114	122	133	-	119	126	138	-	125	133	145	-	131	139	152	-	135	144	157	-
75	725	MBh	22.4	23.1	25.0	26.8	21.9	22.6	24.4	26.2	21.4	22.0	23.9	25.6	20.9	**21.5**	23.3	25.0	19.8	20.4	22.1	23.7	18.4	18.9	20.5	22.0
		S/T	0.80	0.71	0.54	0.35	0.83	0.74	0.56	0.36	0.85	0.76	0.58	0.37	0.88	**0.78**	0.59	0.38	0.91	0.81	0.62	0.40	0.92	0.82	0.62	0.40
		ΔT	23	21	17	12	23	21	17	12	23	21	17	12	23	**21**	18	12	23	21	17	12	21	20	16	11
		KW	1.27	1.30	1.35	1.39	1.38	1.41	1.46	1.51	1.47	1.51	1.56	1.62	1.56	**1.60**	1.65	1.71	1.63	1.67	1.73	1.79	1.69	1.73	1.80	1.86
		Amps	5.5	5.7	5.8	6.1	6.0	6.1	6.3	6.5	6.5	6.6	6.8	7.1	6.9	**7.1**	7.3	7.6	7.3	7.5	7.7	8.0	7.7	7.9	8.2	8.5
		HI PR	219	236	249	259	246	264	279	291	279	301	317	331	318	**342**	362	377	358	385	407	424	395	426	449	469
		LO PR	107	114	125	133	113	120	132	140	118	125	137	146	124	**132**	144	153	130	138	150	160	134	143	156	166
	800	MBh	22.8	23.5	25.4	27.3	22.3	22.9	24.8	26.6	21.7	22.4	24.2	26.0	21.2	**21.8**	23.6	25.3	20.1	20.7	22.4	24.1	18.7	19.2	20.8	22.3
		S/T	0.83	0.75	0.57	0.36	0.87	0.77	0.59	0.38	0.89	0.79	0.60	0.39	0.92	**0.82**	0.62	0.40	0.95	0.85	0.64	0.41	0.96	0.86	0.65	0.42
		ΔT	22	20	16	11	22	20	17	12	22	20	17	12	22	**21**	17	12	22	20	17	11	21	19	15	11
		KW	1.28	1.31	1.35	1.40	1.39	1.42	1.47	1.52	1.48	1.52	1.57	1.63	1.57	**1.61**	1.66	1.72	1.64	1.68	1.74	1.80	1.70	1.74	1.81	1.87
		Amps	5.6	5.7	5.9	6.1	6.0	6.1	6.3	6.6	6.5	6.7	6.9	7.1	6.9	**7.1**	7.3	7.6	7.4	7.5	7.8	8.1	7.8	8.0	8.2	8.5
		HI PR	220	237	250	261	247	266	281	293	281	303	320	333	320	**345**	364	380	360	388	410	427	398	429	453	472
		LO PR	108	115	125	134	114	121	132	141	119	126	138	147	125	**132**	145	154	130	139	152	161	135	144	157	167
	900	MBh	23.2	23.9	25.9	27.8	22.7	23.4	25.3	27.1	22.2	22.8	24.7	26.5	21.6	**22.3**	24.1	25.8	20.5	21.1	22.9	24.6	19.0	19.6	21.2	22.7
		S/T	0.85	0.76	0.58	0.37	0.88	0.79	0.60	0.38	0.90	0.81	0.61	0.39	0.93	**0.83**	0.63	0.41	0.97	0.87	0.65	0.42	0.98	0.87	0.66	0.42
		ΔT	20	19	15	11	20	19	15	11	20	19	15	11	21	**19**	16	11	20	19	15	11	19	17	14	10
		KW	1.29	1.32	1.37	1.42	1.40	1.44	1.49	1.54	1.50	1.54	1.59	1.65	1.59	**1.62**	1.68	1.74	1.66	1.70	1.76	1.83	1.72	1.77	1.83	1.90
		Amps	5.6	5.8	6.0	6.2	6.1	6.2	6.4	6.6	6.6	6.7	7.0	7.2	7.0	**7.2**	7.4	7.7	7.5	7.6	7.9	8.2	7.9	8.1	8.3	8.6
		HI PR	223	240	254	265	251	270	285	297	285	307	324	338	325	**349**	369	385	365	393	415	433	403	434	458	478
		LO PR	109	116	127	135	116	123	134	143	120	128	139	149	126	**134**	146	156	132	141	154	163	137	145	159	169

IDB: Entering Indoor Dry Bulb Temperature

Shaded area reflects ACCA (TVA) conditions

kW = Total system power

High and low pressures are measured at the liquid and suction service valves.

Amps = outdoor unit amps (comp.+fan)

Expanded Cooling Data — GSX140241** + CA*F3636*6D*+TXV+HSK+EEP (cont.)

			Outdoor Ambient Temperature																							
			65				75				85				95				105				115			
			Entering Indoor Wet Bulb Temperature																							
IDB	Airflow		59	63	67	71	59	63	67	71	59	63	67	71	59	63	67	71	59	63	67	71	59	63	67	71
80	725	MBh	22.8	23.3	24.9	26.7	22.3	22.8	24.4	26.0	21.8	22.3	23.8	25.4	21.3	21.7	**23.2**	24.8	20.2	20.6	22.0	23.6	18.7	19.1	20.4	21.8
		S/T	0.88	0.82	0.67	0.5	0.91	0.85	0.69	0.52	0.93	0.87	0.71	0.5	0.96	0.90	**0.73**	0.55	1.00	0.94	0.76	0.6	1.01	0.94	0.77	0.57
		ΔT	25	24	21	17	26	25	21	17	26	25	21	17	26	25	**22**	17	26	24	21	17	24	23	20	16
		kW	1.28	1.31	1.36	1.4	1.39	1.42	1.47	1.53	1.49	1.52	1.58	1.6	1.57	1.61	**1.67**	1.73	1.65	1.69	1.75	1.8	1.71	1.75	1.81	1.88
		Amps	5.6	5.7	5.9	6.1	6.0	6.2	6.4	6.6	6.5	6.7	6.9	7.1	7.0	7.1	**7.4**	7.6	7.4	7.6	7.8	8.1	7.8	8.0	8.3	8.6
		HI PR	221	238	251	262	248	267	282	294	282	304	321	334	321	346	**365**	381	362	389	411	429	399	430	454	473
		LO PR	108	115	126	134	114	122	133	142	119	126	138	147	125	133	**145**	154	131	139	152	162	135	144	157	167
	800	MBh	23.2	23.7	25.3	27.1	22.6	23.1	24.7	26.4	22.1	22.6	24.1	25.8	21.6	22.0	23.5	25.2	20.5	20.9	22.4	23.9	19.0	19.4	20.7	22.2
		S/T	0.92	0.86	0.70	0.5	0.95	0.89	0.72	0.54	0.97	0.91	0.74	0.6	1.00	0.94	0.77	0.57	1.00	0.98	0.80	0.6	1.00	0.99	0.80	0.60
		ΔT	24	23	20	16	25	24	21	16	25	24	21	16	25	24	21	17	24	24	20	16	22	22	19	15
		kW	1.29	1.32	1.37	1.4	1.40	1.43	1.48	1.54	1.50	1.53	1.59	1.6	1.58	1.62	1.68	1.74	1.66	1.70	1.76	1.8	1.72	1.76	1.82	1.89
		Amps	5.6	5.8	5.9	6.1	6.1	6.2	6.4	6.6	6.6	6.7	6.9	7.2	7.0	7.2	7.4	7.7	7.4	7.6	7.9	8.1	7.9	8.1	8.3	8.6
		HI PR	223	240	253	264	250	269	284	296	284	306	323	337	324	348	368	384	364	392	414	432	402	433	457	477
		LO PR	109	116	127	135	115	123	134	142	120	127	139	148	126	134	146	156	132	140	153	163	136	145	158	169
	900	MBh	23.6	24.2	25.8	27.6	23.1	23.6	25.2	27.0	22.5	23.0	24.6	26.3	22.0	22.5	24.0	25.7	20.9	21.4	22.8	24.4	19.4	19.8	21.1	22.6
		S/T	0.93	0.87	0.71	0.5	0.97	0.91	0.74	0.55	1.00	0.93	0.76	0.6	1.00	0.96	0.78	0.58	1.00	1.00	0.81	0.6	1.00	1.00	0.82	0.61
		ΔT	23	22	19	15	23	22	19	15	23	22	19	15	22	22	19	15	21	22	19	15	20	20	18	14
		kW	1.30	1.33	1.38	1.4	1.42	1.45	1.50	1.55	1.51	1.55	1.61	1.7	1.60	1.64	1.70	1.76	1.68	1.72	1.78	1.8	1.74	1.78	1.85	1.91
		Amps	5.7	5.8	6.0	6.2	6.1	6.3	6.5	6.7	6.6	6.8	7.0	7.3	7.1	7.2	7.5	7.8	7.5	7.7	7.9	8.2	8.0	8.1	8.4	8.7
		HI PR	226	243	256	267	253	272	288	300	288	310	327	341	328	353	373	389	369	397	419	437	407	438	463	483
		LO PR	110	117	128	137	117	124	136	144	121	129	141	150	127	136	148	158	134	142	155	165	138	147	160	171
85	725	MBh	23.2	23.7	24.8	26.5	22.7	23.1	24.2	25.9	22.2	22.6	23.7	25.2	21.6	22.0	23.1	24.6	20.5	20.9	21.9	23.4	19.0	19.4	20.3	21.7
		S/T	0.92	0.89	0.80	0.65	0.95	0.92	0.83	0.67	0.98	0.94	0.85	0.69	1.00	0.97	0.88	0.71	1.00	1.00	0.91	0.74	1.00	1.00	0.92	0.75
		ΔT	27	27	25	22	27	27	25	22	27	27	26	22	27	27	26	22	26	27	25	22	24	25	24	20
		kW	1.29	1.32	1.37	1.42	1.40	1.44	1.49	1.54	1.50	1.54	1.59	1.65	1.59	1.63	1.68	1.74	1.66	1.70	1.76	1.83	1.72	1.77	1.83	1.90
		Amps	5.6	5.8	6.0	6.2	6.1	6.2	6.4	6.6	6.6	6.7	7.0	7.2	7.0	7.2	7.4	7.7	7.5	7.6	7.9	8.2	7.9	8.1	8.3	8.6
		HI PR	223	240	254	265	251	270	285	297	285	307	324	338	325	349	369	385	365	393	415	433	403	434	458	478
		LO PR	109	116	127	135	116	123	134	143	120	128	139	149	126	134	147	156	132	141	154	164	137	145	159	169
	800	MBh	23.6	24.0	25.2	26.9	23.0	23.5	24.6	26.2	22.5	22.9	24.0	25.6	21.9	22.4	23.4	25.0	20.8	21.3	22.3	23.7	19.3	19.7	20.6	22.0
		S/T	0.96	0.93	0.84	0.68	0.99	0.96	0.87	0.70	1.00	0.98	0.89	0.72	1.00	1.00	0.92	0.74	1.00	1.00	0.95	0.77	1.00	1.00	0.96	0.78
		ΔT	26	26	24	21	26	26	24	21	26	26	25	21	25	26	25	21	24	24	24	21	22	23	23	20
		kW	1.30	1.33	1.38	1.43	1.41	1.45	1.50	1.55	1.51	1.55	1.60	1.66	1.60	1.64	1.69	1.76	1.67	1.71	1.77	1.84	1.73	1.78	1.84	1.91
		Amps	5.7	5.8	6.0	6.2	6.1	6.3	6.5	6.7	6.6	6.8	7.0	7.2	7.1	7.2	7.5	7.7	7.5	7.7	7.9	8.2	7.9	8.1	8.4	8.7
		HI PR	225	242	256	267	252	272	287	299	287	309	326	340	327	352	371	387	368	396	418	436	406	437	462	482
		LO PR	110	117	128	136	116	124	135	144	121	129	140	150	127	135	148	157	133	142	155	165	138	146	160	170
	900	MBh	24.1	24.5	25.7	27.4	23.5	24.0	25.1	26.8	22.9	23.4	24.5	26.1	22.4	22.8	23.9	25.5	21.3	21.7	22.7	24.2	19.7	20.1	21.0	22.4
		S/T	0.98	0.94	0.85	0.69	1.00	0.98	0.88	0.72	1.00	1.00	0.90	0.73	1.00	1.00	0.93	0.76	1.00	1.00	0.97	0.79	1.00	1.00	0.98	0.79
		ΔT	24	24	22	19	24	24	23	20	23	24	23	20	23	23	23	20	22	22	22	19	20	21	21	18
		kW	1.32	1.35	1.39	1.44	1.43	1.46	1.51	1.57	1.53	1.56	1.62	1.68	1.62	1.65	1.71	1.78	1.69	1.73	1.79	1.86	1.75	1.80	1.86	1.93
		Amps	5.7	5.9	6.1	6.3	6.2	6.3	6.5	6.8	6.7	6.9	7.1	7.3	7.1	7.3	7.5	7.8	7.6	7.8	8.0	8.3	8.0	8.2	8.5	8.8
		HI PR	228	245	259	270	256	275	290	303	291	313	330	345	331	356	376	392	372	401	423	441	412	443	468	488
		LO PR	112	119	130	138	118	125	137	146	122	130	142	152	129	137	149	159	135	143	157	167	139	148	162	173

IDB: Entering Indoor Dry Bulb Temperature

Shaded area reflects AHRI conditions

kW = Total system power

High and low pressures are measured at the liquid and suction service valves.

Amps = outdoor unit amps (comp.+fan)

Expanded Cooling Data — GSX140251** + CA*F3636*6** + EEP

			Outdoor Ambient Temperature																							
			65				75				85				95				105				115			
			Entering Indoor Wet Bulb Temperature																							
IDB	Airflow		59	63	67	71	59	63	67	71	59	63	67	71	59	63	67	71	59	63	67	71	59	63	67	71
70	700	MBh	24.5	24.9	25.6	-	24.3	24.7	25.4	-	23.7	24.0	24.7	-	22.6	22.9	23.7	-	21.3	21.6	22.3	-	20.1	20.4	21.1	-
		S/T	0.63	0.56	0.43	-	0.63	0.56	0.43	-	0.66	0.59	0.46	-	0.68	0.60	0.48	-	1.00	0.62	0.50	-	1.00	0.67	0.55	-
		ΔT	20	18	15	-	20	18	15	-	21	19	15	-	20	18	15	-	20	18	14	-	21	19	16	-
		KW	1.41	1.40	1.40	-	1.57	1.57	1.57	-	1.75	1.75	1.75	-	1.95	1.95	1.95	-	2.17	2.17	2.17	-	2.43	2.43	2.43	-
		Amps	5.3	5.3	5.2	-	6.0	6.0	6.0	-	6.9	6.8	6.8	-	7.8	7.8	7.7	-	8.8	8.8	8.8	-	10.0	10.0	10.0	-
		HI PR	253	254	256	-	293	294	296	-	334	335	337	-	379	380	382	-	427	428	430	-	478	480	481	-
		LO PR	121	123	126	-	128	130	133	-	135	136	139	-	140	142	145	-	145	147	150	-	152	153	156	-
	800	MBh	25.0	25.3	26.0	-	24.8	25.1	25.8	-	24.1	24.5	25.2	-	23.0	23.4	24.1	-	21.7	22.1	22.8	-	20.5	20.8	21.6	-
		S/T	0.66	0.59	0.46	-	0.67	0.60	0.47	-	0.69	0.62	0.49	-	0.71	0.64	0.51	-	1.00	0.66	0.53	-	1.00	0.71	0.58	-
		ΔT	19	17	14	-	19	17	13	-	19	17	14	-	19	17	13	-	19	17	13	-	20	18	14	-
		KW	1.41	1.41	1.41	-	1.58	1.58	1.57	-	1.76	1.76	1.76	-	1.96	1.96	1.96	-	2.18	2.18	2.18	-	2.44	2.44	2.44	-
		Amps	5.3	5.3	5.3	-	6.1	6.0	6.0	-	6.9	6.9	6.9	-	7.8	7.8	7.8	-	8.8	8.8	8.8	-	10.0	10.0	10.0	-
		HI PR	255	257	258	-	295	296	298	-	337	338	339	-	381	382	384	-	429	430	432	-	481	482	484	-
		LO PR	123	125	128	-	131	132	135	-	137	138	141	-	142	144	147	-	148	149	152	-	154	156	159	-
	900	MBh	25.5	25.9	26.6	-	25.3	25.6	26.4	-	24.7	25.0	25.7	-	23.6	23.9	24.6	-	22.3	22.6	23.3	-	21.0	21.4	22.1	-
		S/T	0.67	0.60	0.47	-	0.68	0.60	0.48	-	0.70	0.63	0.50	-	1.00	0.65	0.52	-	1.00	0.67	0.54	-	1.00	0.72	0.59	-
		ΔT	18	16	13	-	18	16	12	-	18	16	13	-	18	16	12	-	18	16	12	-	19	17	13	-
		KW	1.42	1.42	1.42	-	1.59	1.58	1.58	-	1.77	1.77	1.76	-	1.97	1.97	1.96	-	2.19	2.19	2.19	-	2.45	2.45	2.45	-
		Amps	5.3	5.3	5.3	-	6.1	6.1	6.1	-	6.9	6.9	6.9	-	7.8	7.8	7.8	-	8.8	8.8	8.8	-	10.0	10.0	10.0	-
		HI PR	258	259	261	-	298	299	300	-	339	340	342	-	384	385	387	-	432	433	435	-	483	484	486	-
		LO PR	126	127	130	-	133	135	138	-	140	141	144	-	145	146	149	-	150	152	155	-	157	158	161	-
75	700	MBh	24.5	24.9	25.6	26.7	24.3	24.7	25.4	26.5	23.7	24.0	24.8	25.9	22.6	**23.0**	23.7	24.8	21.3	21.6	22.3	23.4	20.1	20.4	21.1	22.2
		S/T	0.75	0.68	0.55	0.42	0.76	0.68	0.56	0.42	1.00	0.71	0.58	0.44	1.00	**0.73**	0.60	0.46	1.00	0.75	0.62	0.48	1.00	0.80	0.67	0.53
		ΔT	25	23	19	15	25	23	19	15	25	23	19	15	25	**23**	19	15	24	22	19	15	26	24	20	16
		KW	1.40	1.40	1.40	1.41	1.57	1.57	1.56	1.58	1.75	1.75	1.75	1.76	1.95	**1.95**	1.95	1.96	2.17	2.17	2.17	2.18	2.43	2.43	2.43	2.44
		Amps	5.3	5.2	5.2	5.3	6.0	6.0	6.0	6.0	6.8	6.8	6.8	6.9	7.8	**7.8**	7.7	7.8	8.8	8.8	8.8	8.8	10.0	10.0	9.9	10.0
		HI PR	253	254	256	261	293	294	296	300	334	335	337	342	379	**380**	382	386	427	428	430	434	479	480	481	486
		LO PR	121	123	126	131	128	130	133	138	135	136	139	144	140	**142**	145	150	145	147	150	155	152	153	157	162
	800	MBh	25.0	25.3	26.1	27.2	24.8	25.1	25.8	26.9	24.1	24.5	25.2	26.3	23.1	**23.4**	24.1	25.2	21.7	22.1	22.8	23.9	20.5	20.9	21.6	22.7
		S/T	0.78	0.71	0.58	0.45	0.79	0.72	0.59	0.46	1.00	0.74	0.61	0.48	1.00	**0.76**	0.63	0.50	1.00	0.78	0.65	0.52	1.00	1.00	0.70	0.57
		ΔT	24	22	18	14	24	22	18	14	24	22	18	14	24	**22**	18	14	23	21	18	14	25	23	19	15
		KW	1.41	1.41	1.41	1.42	1.58	1.58	1.57	1.59	1.76	1.76	1.76	1.77	1.96	**1.96**	1.96	1.97	2.18	2.18	2.18	2.19	2.44	2.44	2.44	2.45
		Amps	5.3	5.3	5.3	5.3	6.0	6.0	6.0	6.1	6.9	6.9	6.9	6.9	7.8	**7.8**	7.8	7.8	8.8	8.8	8.8	8.8	10.0	10.0	10.0	10.0
		HI PR	256	257	259	263	295	296	298	303	337	338	340	344	381	**383**	384	389	430	431	432	437	481	482	484	488
		LO PR	123	125	128	133	131	132	135	140	137	138	141	147	142	**144**	147	152	148	149	152	157	154	156	159	164
	900	MBh	25.5	25.9	26.6	27.7	25.3	25.7	26.4	27.5	24.7	25.0	25.8	26.9	23.6	**23.9**	24.7	25.8	22.3	22.6	23.3	24.4	21.1	21.4	22.1	23.2
		S/T	0.79	0.72	0.59	0.46	1.00	0.73	0.60	0.46	1.00	0.75	0.62	0.49	1.00	**0.77**	0.64	0.51	1.00	0.79	0.66	0.53	1.00	1.00	0.71	0.57
		ΔT	23	21	17	13	23	21	17	13	23	21	17	13	23	**21**	17	13	22	20	17	13	24	22	18	14
		KW	1.42	1.42	1.42	1.43	1.58	1.58	1.58	1.59	1.77	1.77	1.76	1.78	1.97	**1.96**	1.96	1.97	2.19	2.19	2.18	2.20	2.45	2.45	2.44	2.46
		Amps	5.3	5.3	5.3	5.4	6.1	6.1	6.1	6.1	6.9	6.9	6.9	7.0	7.8	**7.8**	7.8	7.9	8.8	8.8	8.8	8.9	10.0	10.0	10.0	10.1
		HI PR	258	259	261	265	298	299	301	305	339	340	342	346	384	**385**	387	391	432	433	435	439	483	485	486	491
		LO PR	126	127	130	136	133	135	138	143	140	141	144	149	145	**146**	149	155	150	152	155	160	157	158	161	166

IDB: Entering Indoor Dry Bulb Temperature

Shaded area reflects ACCA (TVA) conditions

kW = Total system power

High and low pressures are measured at the liquid and suction service valves.

Amps = outdoor unit amps (comp.+fan)

Expanded Cooling Data — GSX140251** + CA*F3636*6** + EEP (cont.)

			Outdoor Ambient Temperature																							
			65				75				85				95				105				115			
			Entering Indoor Wet Bulb Temperature																							
IDB	Airflow		59	63	67	71	59	63	67	71	59	63	67	71	59	63	67	71	59	63	67	71	59	63	67	71
80	700	MBh	24.7	25.0	25.7	26.8	24.5	24.8	25.5	26.6	23.8	24.2	24.9	26.0	22.7	23.1	**23.8**	24.9	21.4	21.7	22.5	23.6	20.2	20.5	21.3	22.4
		S/T	0.87	0.80	0.67	0.5	1.00	0.80	0.67	0.54	1.00	0.83	0.70	0.6	1.00	0.84	**0.72**	0.58	1.00	1.00	0.74	0.6	1.00	1.00	0.79	0.65
		ΔT	29	27	23	20	29	27	23	20	29	27	24	20	29	27	**23**	20	29	27	23	19	30	28	24	21
		KW	1.41	1.40	1.40	1.4	1.57	1.57	1.57	1.58	1.75	1.75	1.75	1.8	1.95	1.95	**1.95**	1.96	2.17	2.17	2.17	2.2	2.43	2.43	2.43	2.44
		Amps	5.3	5.3	5.2	5.3	6.0	6.0	6.0	6.1	6.9	6.8	6.8	6.9	7.8	7.8	**7.7**	7.8	8.8	8.8	8.8	8.8	10.0	10.0	10.0	10.0
		HI PR	254	255	257	261	293	294	296	301	335	336	338	342	380	381	**382**	387	428	429	431	435	479	480	482	486
		LO PR	122	123	126	131	129	130	133	139	135	137	140	145	141	142	**145**	150	146	147	150	156	153	154	157	162
	800	MBh	25.1	25.5	26.2	27.3	24.9	25.2	26.0	27.1	24.3	24.6	25.3	26.4	23.2	23.5	24.2	25.3	21.8	22.2	22.9	24.0	20.6	21.0	21.7	22.8
		S/T	1.00	0.83	0.70	0.6	1.00	0.84	0.71	0.57	1.00	0.86	0.73	0.6	1.00	0.88	0.75	0.62	1.00	1.00	0.77	0.6	1.00	1.00	0.82	0.69
		ΔT	28	26	22	18	28	26	22	18	28	26	23	19	28	26	22	18	28	26	22	18	29	27	23	19
		KW	1.41	1.41	1.41	1.4	1.58	1.58	1.57	1.59	1.76	1.76	1.76	1.8	1.96	1.96	1.96	1.97	2.18	2.18	2.18	2.2	2.44	2.44	2.44	2.45
		Amps	5.3	5.3	5.3	5.3	6.0	6.0	6.0	6.1	6.9	6.9	6.9	6.9	7.8	7.8	7.8	7.8	8.8	8.8	8.8	8.9	10.0	10.0	10.0	10.0
		HI PR	256	257	259	263	296	297	299	303	337	338	340	344	382	383	385	389	430	431	433	437	481	483	484	489
		LO PR	124	125	128	133	131	133	136	141	138	139	142	147	143	144	147	152	148	150	153	158	155	156	159	164
	900	MBh	25.7	26.0	26.7	27.8	25.4	25.8	26.5	27.6	24.8	25.2	25.9	27.0	23.7	24.1	24.8	25.9	22.4	22.7	23.5	24.6	21.2	21.5	22.2	23.3
		S/T	1.00	0.84	0.71	0.6	1.00	0.84	0.72	0.58	1.00	0.87	0.74	0.6	1.00	1.00	0.76	0.62	1.00	1.00	0.78	0.6	1.00	1.00	0.83	0.69
		ΔT	27	25	21	17	27	25	21	17	27	25	22	18	27	25	21	17	27	25	21	17	28	26	22	18
		KW	1.42	1.42	1.42	1.4	1.58	1.58	1.58	1.59	1.77	1.77	1.76	1.8	1.97	1.97	1.96	1.98	2.19	2.19	2.19	2.2	2.45	2.45	2.45	2.46
		Amps	5.3	5.3	5.3	5.4	6.1	6.1	6.1	6.1	6.9	6.9	6.9	7.0	7.8	7.8	7.8	7.9	8.8	8.8	8.8	8.9	10.0	10.0	10.0	10.1
		HI PR	259	260	261	266	298	299	301	305	340	341	343	347	384	385	387	392	433	434	435	440	484	485	487	491
		LO PR	126	128	131	136	134	135	138	143	140	142	145	150	145	147	150	155	151	152	155	160	157	159	162	167
85	700	MBh	25.1	25.4	26.1	27.2	24.9	25.2	25.9	27.0	24.2	24.6	25.3	26.4	23.1	23.5	24.2	25.3	21.8	22.2	22.9	24.0	20.6	20.9	21.7	22.8
		S/T	1.00	0.89	0.76	0.63	1.00	0.90	0.77	0.63	1.00	1.00	0.79	0.66	1.00	1.00	0.81	0.68	1.00	1.00	0.83	0.70	1.00	1.00	1.00	0.75
		ΔT	33	31	27	24	33	31	27	23	33	31	28	24	33	31	27	23	33	31	27	23	34	32	28	24
		KW	1.41	1.41	1.40	1.42	1.57	1.57	1.57	1.58	1.76	1.76	1.75	1.76	1.96	1.95	1.95	1.96	2.18	2.18	2.17	2.19	2.44	2.44	2.43	2.45
		Amps	5.3	5.3	5.3	5.3	6.0	6.0	6.0	6.1	6.9	6.9	6.8	6.9	7.8	7.8	7.8	7.8	8.8	8.8	8.8	8.8	10.0	10.0	10.0	10.0
		HI PR	255	256	258	262	295	296	297	302	336	337	339	343	381	382	384	388	429	430	432	436	480	481	483	488
		LO PR	123	125	128	133	131	132	135	140	137	139	142	147	142	144	147	152	148	149	152	157	154	156	159	164
	800	MBh	25.5	25.9	26.6	27.7	25.3	25.6	26.4	27.5	24.7	25.0	25.7	26.8	23.6	23.9	24.7	25.8	22.3	22.6	23.3	24.4	21.0	21.4	22.1	23.2
		S/T	1.00	0.93	0.80	0.66	1.00	0.93	0.80	0.67	1.00	1.00	0.83	0.69	1.00	1.00	0.85	0.71	1.00	1.00	0.87	0.73	1.00	1.00	1.00	0.78
		ΔT	32	30	26	22	32	30	26	22	32	30	26	23	32	30	26	22	32	30	26	22	33	31	27	23
		KW	1.42	1.42	1.41	1.42	1.58	1.58	1.58	1.59	1.76	1.76	1.76	1.77	1.96	1.96	1.96	1.97	2.19	2.18	2.18	2.19	2.45	2.44	2.44	2.45
		Amps	5.3	5.3	5.3	5.3	6.1	6.1	6.0	6.1	6.9	6.9	6.9	6.9	7.8	7.8	7.8	7.9	8.8	8.8	8.8	8.9	10.0	10.0	10.0	10.1
		HI PR	257	258	260	265	297	298	300	304	338	339	341	346	383	384	386	390	431	432	434	438	483	484	485	490
		LO PR	126	127	130	135	133	134	137	143	139	141	144	149	145	146	149	154	150	151	154	160	157	158	161	166
	900	MBh	26.1	26.4	27.1	28.2	25.9	26.2	26.9	28.0	25.2	25.6	26.3	27.4	24.1	24.5	25.2	26.3	22.8	23.1	23.9	25.0	21.6	21.9	22.7	23.8
		S/T	1.00	0.93	0.81	0.67	1.00	1.00	0.81	0.68	1.00	1.00	0.84	0.70	1.00	1.00	0.85	0.72	1.00	1.00	0.87	0.74	1.00	1.00	1.00	0.79
		ΔT	31	29	25	21	31	29	25	21	31	29	25	22	31	29	25	21	31	29	25	21	32	30	26	22
		KW	1.42	1.42	1.42	1.43	1.59	1.59	1.58	1.60	1.77	1.77	1.77	1.78	1.97	1.97	1.97	1.98	2.19	2.19	2.19	2.20	2.45	2.45	2.45	2.46
		Amps	5.3	5.3	5.3	5.4	6.1	6.1	6.1	6.1	6.9	6.9	6.9	7.0	7.8	7.8	7.8	7.9	8.9	8.9	8.8	8.9	10.1	10.0	10.0	10.1
		HI PR	260	261	263	267	299	300	302	307	341	342	344	348	386	387	388	393	434	435	437	441	485	486	488	492
		LO PR	128	130	133	138	136	137	140	145	142	143	146	151	147	149	152	157	153	154	157	162	159	161	164	169

IDB: Entering Indoor Dry Bulb Temperature

Shaded area reflects AHRI conditions

kW = Total system power

High and low pressures are measured at the liquid and suction service valves.

Amps = outdoor unit amps (comp.+fan)

Expanded Cooling Data — GSX140301K* + CA*F3642*6** + EEP

			Outdoor Ambient Temperature																							
			65				75				85				95				105				115			
			Entering Indoor Wet Bulb Temperature																							
IDB	Airflow		59	63	67	71	59	63	67	71	59	63	67	71	59	63	67	71	59	63	67	71	59	63	67	71
70	875	MBh	29.3	29.7	30.6	-	29.0	29.5	30.3	-	28.3	28.7	29.6	-	27.0	27.4	28.2	-	25.3	25.8	26.6	-	23.9	24.3	25.2	-
		S/T	0.59	0.52	0.38	-	0.60	0.52	0.39	-	0.62	0.55	0.42	-	1.00	0.57	0.43	-	1.00	0.59	0.46	-	1.00	0.64	0.51	-
		ΔT	20	18	15	-	20	18	14	-	20	18	15	-	20	18	14	-	19	18	14	-	21	19	15	-
		KW	1.76	1.75	1.75	-	1.95	1.95	1.95	-	2.17	2.17	2.17	-	2.41	2.41	2.41	-	2.68	2.68	2.67	-	2.99	2.99	2.99	-
		Amps	6.4	6.4	6.4	-	7.3	7.3	7.3	-	8.3	8.3	8.3	-	9.4	9.4	9.4	-	10.6	10.6	10.6	-	12.0	12.0	12.0	-
		HI PR	250	251	252	-	289	290	292	-	330	331	333	-	375	376	377	-	422	424	425	-	474	475	476	-
		LO PR	124	125	128	-	131	133	136	-	138	139	142	-	143	145	148	-	149	150	154	-	156	157	160	-
	1000	MBh	29.7	30.1	31.0	-	29.4	29.8	30.7	-	28.7	29.1	29.9	-	27.3	27.8	28.6	-	25.7	26.1	27.0	-	24.3	24.7	25.6	-
		S/T	0.65	0.58	0.44	-	0.66	0.58	0.45	-	0.68	0.61	0.47	-	1.00	0.63	0.49	-	1.00	0.65	0.51	-	1.00	0.70	0.56	-
		ΔT	19	17	13	-	19	17	13	-	19	17	14	-	19	17	13	-	18	17	13	-	20	18	14	-
		KW	1.77	1.77	1.76	-	1.96	1.96	1.96	-	2.18	2.18	2.18	-	2.42	2.42	2.42	-	2.69	2.69	2.68	-	3.00	3.00	3.00	-
		Amps	6.4	6.4	6.4	-	7.3	7.3	7.3	-	8.3	8.3	8.3	-	9.4	9.4	9.4	-	10.6	10.6	10.6	-	12.1	12.1	12.1	-
		HI PR	252	253	254	-	291	292	294	-	332	333	335	-	377	378	379	-	425	426	427	-	476	477	478	-
		LO PR	125	127	130	-	133	135	138	-	140	141	144	-	145	147	150	-	151	152	155	-	157	159	162	-
	1125	MBh	30.1	30.6	31.4	-	29.9	30.3	31.2	-	29.1	29.5	30.4	-	27.8	28.2	29.1	-	26.2	26.6	27.5	-	24.7	25.1	26.0	-
		S/T	0.68	0.61	0.48	-	0.69	0.61	0.48	-	0.71	0.64	0.51	-	1.00	0.66	0.53	-	1.00	0.68	0.55	-	1.00	0.73	0.60	-
		ΔT	18	16	13	-	18	16	12	-	18	16	13	-	18	16	12	-	17	16	12	-	19	17	13	-
		KW	1.78	1.77	1.77	-	1.97	1.97	1.97	-	2.19	2.19	2.19	-	2.43	2.43	2.43	-	2.70	2.70	2.69	-	3.01	3.01	3.01	-
		Amps	6.5	6.5	6.4	-	7.4	7.4	7.3	-	8.4	8.4	8.3	-	9.5	9.5	9.4	-	10.7	10.7	10.7	-	12.1	12.1	12.1	-
		HI PR	254	255	257	-	293	294	296	-	334	335	337	-	379	380	382	-	427	428	429	-	478	479	481	-
		LO PR	128	129	132	-	135	137	140	-	142	143	146	-	147	149	152	-	153	154	157	-	160	161	164	-
75	875	MBh	29.3	29.7	30.6	31.9	29.1	29.5	30.3	31.7	28.3	28.7	29.6	30.9	27.0	**27.4**	28.3	29.6	25.4	25.8	26.7	28.0	23.9	24.3	25.2	26.5
		S/T	0.72	0.64	0.51	0.37	0.72	0.65	0.52	0.38	1.00	0.67	0.54	0.40	1.00	**0.69**	0.56	0.42	1.00	0.71	0.58	0.44	1.00	1.00	0.63	0.49
		ΔT	24	22	19	15	24	22	19	15	24	22	19	15	24	**22**	18	15	23	22	18	15	25	23	19	16
		KW	1.76	1.75	1.75	1.77	1.95	1.95	1.95	1.96	2.17	2.17	2.17	2.18	2.41	**2.41**	2.41	2.42	2.68	2.68	2.67	2.69	2.99	2.99	2.99	3.00
		Amps	6.4	6.4	6.3	6.4	7.3	7.3	7.2	7.3	8.3	8.3	8.3	8.3	9.4	**9.4**	9.3	9.4	10.6	10.6	10.6	10.6	12.0	12.0	12.0	12.1
		HI PR	250	251	253	257	289	290	292	296	330	331	333	338	375	**376**	378	382	423	424	425	430	474	475	477	481
		LO PR	124	125	128	134	131	133	136	141	138	139	142	148	143	**145**	148	153	149	150	154	159	156	157	160	166
	1000	MBh	29.7	30.1	31.0	32.3	29.4	29.9	30.7	32.1	28.7	29.1	30.0	31.3	27.4	**27.8**	28.6	30.0	25.8	26.2	27.0	28.4	24.3	24.7	25.6	26.9
		S/T	0.78	0.70	0.57	0.43	0.78	0.71	0.58	0.44	1.00	0.73	0.60	0.46	1.00	**0.75**	0.62	0.48	1.00	0.77	0.64	0.50	1.00	1.00	0.69	0.55
		ΔT	23	21	17	14	23	21	17	14	23	21	18	14	23	**21**	17	14	22	21	17	14	24	22	18	15
		KW	1.77	1.76	1.76	1.78	1.96	1.96	1.96	1.97	2.18	2.18	2.18	2.19	2.42	**2.42**	2.42	2.43	2.69	2.69	2.68	2.70	3.00	3.00	3.00	3.01
		Amps	6.4	6.4	6.4	6.5	7.3	7.3	7.3	7.4	8.3	8.3	8.3	8.4	9.4	**9.4**	9.4	9.5	10.6	10.6	10.6	10.7	12.1	12.1	12.0	12.1
		HI PR	252	253	255	259	291	292	294	298	332	334	335	340	377	**378**	380	384	425	426	428	432	476	477	479	483
		LO PR	126	127	130	135	133	135	138	143	140	141	144	150	145	**147**	150	155	151	152	155	161	158	159	162	167
	1125	MBh	30.2	30.6	31.5	32.8	29.9	30.3	31.2	32.5	29.1	29.6	30.4	31.8	27.8	**28.2**	29.1	30.4	26.2	26.6	27.5	28.8	24.7	25.2	26.0	27.4
		S/T	0.81	0.73	0.60	0.46	1.00	0.74	0.61	0.47	1.00	0.77	0.63	0.49	1.00	**0.78**	0.65	0.51	1.00	0.81	0.67	0.53	1.00	1.00	0.72	0.58
		ΔT	22	20	17	13	22	20	16	13	22	20	17	13	22	**20**	16	13	21	20	16	13	23	21	17	14
		KW	1.77	1.77	1.77	1.78	1.97	1.97	1.97	1.98	2.19	2.19	2.19	2.20	2.43	**2.43**	2.43	2.44	2.70	2.70	2.69	2.71	3.01	3.01	3.00	3.02
		Amps	6.5	6.4	6.4	6.5	7.4	7.4	7.3	7.4	8.4	8.4	8.3	8.4	9.5	**9.5**	9.4	9.5	10.7	10.7	10.7	10.7	12.1	12.1	12.1	12.2
		HI PR	254	255	257	261	293	294	296	300	335	336	337	342	379	**380**	382	386	427	428	430	434	478	479	481	485
		LO PR	128	129	132	137	135	137	140	145	142	143	146	152	147	**149**	152	157	153	154	157	163	160	161	164	169

IDB: Entering Indoor Dry Bulb Temperature

Shaded area reflects ACCA (TVA) conditions

kW = Total system power

High and low pressures are measured at the liquid and suction service valves.

Amps = outdoor unit amps (comp.+fan)

EXPANDED COOLING DATA — GSX140301K* + CA*F3642*6** + EEP (CONT.)

			Outdoor Ambient Temperature																							
			65				75				85				95				105				115			
			Entering Indoor Wet Bulb Temperature																							
IDB	Airflow		59	63	67	71	59	63	67	71	59	63	67	71	59	63	67	71	59	63	67	71	59	63	67	71
80	875	MBh	29.5	29.9	30.8	32.1	29.2	29.6	30.5	31.8	28.4	28.9	29.7	31.1	27.1	27.5	28.4	29.8	25.5	25.9	26.8	28.1	24.0	24.5	25.3	26.7
		S/T	1.00	0.77	0.63	0.5	1.00	0.77	0.64	0.50	1.00	0.80	0.66	0.5	1.00	1.00	0.68	0.54	1.00	1.00	0.70	0.6	1.00	1.00	0.75	0.61
		ΔT	28	26	23	19	28	26	23	19	28	26	23	19	28	26	23	19	28	26	22	19	29	27	23	20
		KW	1.76	1.75	1.75	1.8	1.95	1.95	1.95	1.96	2.17	2.17	2.17	2.2	2.41	2.41	2.41	2.42	2.68	2.68	2.67	2.7	2.99	2.99	2.99	3.00
		Amps	6.4	6.4	6.3	6.4	7.3	7.3	7.3	7.3	8.3	8.3	8.3	8.3	9.4	9.4	9.4	9.4	10.6	10.6	10.6	10.6	12.0	12.0	12.0	12.1
		HI PR	250	251	253	257	290	291	292	297	331	332	334	338	375	376	378	382	423	424	426	430	474	475	477	481
		LO PR	124	126	129	134	132	133	136	142	138	140	143	148	144	145	149	154	149	151	154	159	156	158	161	166
	1000	MBh	29.9	30.3	31.1	32.5	29.6	30.0	30.9	32.2	28.8	29.2	30.1	31.5	27.5	27.9	**28.8**	30.1	25.9	26.3	27.2	28.5	24.4	24.8	25.7	27.1
		S/T	1.00	0.82	0.69	0.6	1.00	0.83	0.70	0.56	1.00	0.85	0.72	0.6	1.00	1.00	**0.74**	0.60	1.00	1.00	0.76	0.6	1.00	1.00	0.81	0.67
		ΔT	27	25	22	18	27	25	21	18	27	25	22	18	27	25	**21**	18	26	25	21	18	28	26	22	19
		KW	1.77	1.76	1.76	1.8	1.96	1.96	1.96	1.97	2.18	2.18	2.18	2.2	2.42	2.42	**2.42**	2.43	2.69	2.69	2.68	2.7	3.00	3.00	3.00	3.01
		Amps	6.4	6.4	6.4	6.5	7.3	7.3	7.3	7.4	8.3	8.3	8.3	8.4	9.4	9.4	**9.4**	9.5	10.6	10.6	10.6	10.7	12.1	12.1	12.0	12.1
		HI PR	252	253	255	259	292	293	295	299	333	334	336	340	377	378	**380**	385	425	426	428	432	476	477	479	484
		LO PR	126	128	131	136	134	135	138	144	140	142	145	150	146	147	**150**	156	151	153	156	161	158	160	163	168
	1125	MBh	30.3	30.7	31.6	32.9	30.1	30.5	31.3	32.7	29.3	29.7	30.6	31.9	28.0	28.4	29.3	30.6	26.4	26.8	27.7	29.0	24.9	25.3	26.2	27.5
		S/T	1.00	0.86	0.72	0.6	1.00	0.86	0.73	0.59	1.00	0.89	0.76	0.6	1.00	1.00	0.77	0.63	1.00	1.00	0.80	0.7	1.00	1.00	0.85	0.71
		ΔT	26	24	21	17	26	24	21	17	26	24	21	17	26	24	21	17	26	24	20	17	27	25	21	18
		KW	1.78	1.77	1.77	1.8	1.97	1.97	1.97	1.98	2.19	2.19	2.19	2.2	2.43	2.43	2.43	2.44	2.70	2.70	2.69	2.7	3.01	3.01	3.01	3.02
		Amps	6.5	6.5	6.4	6.5	7.4	7.4	7.3	7.4	8.4	8.4	8.3	8.4	9.5	9.5	9.4	9.5	10.7	10.7	10.7	10.7	12.1	12.1	12.1	12.2
		HI PR	254	255	257	262	294	295	297	301	335	336	338	342	379	380	382	387	427	428	430	434	478	479	481	486
		LO PR	128	130	133	138	136	137	140	146	142	144	147	152	148	149	152	158	153	155	158	163	160	162	165	170
85	875	MBh	30.0	30.4	31.3	32.6	29.7	30.1	31.0	32.3	28.9	29.3	30.2	31.6	27.6	28.0	28.9	30.2	26.0	26.4	27.3	28.6	24.5	25.0	25.8	27.2
		S/T	1.00	0.86	0.73	0.59	1.00	0.87	0.74	0.60	1.00	1.00	0.76	0.62	1.00	1.00	0.78	0.64	1.00	1.00	0.80	0.66	1.00	1.00	1.00	0.71
		ΔT	31	30	26	23	31	30	26	23	32	30	26	23	31	30	26	23	31	29	26	22	32	30	27	23
		KW	1.76	1.76	1.76	1.77	1.96	1.96	1.95	1.97	2.18	2.18	2.17	2.19	2.42	2.41	2.41	2.43	2.68	2.68	2.68	2.69	3.00	2.99	2.99	3.01
		Amps	6.4	6.4	6.4	6.4	7.3	7.3	7.3	7.3	8.3	8.3	8.3	8.3	9.4	9.4	9.4	9.4	10.6	10.6	10.6	10.7	12.0	12.0	12.0	12.1
		HI PR	251	252	254	259	291	292	294	298	332	333	335	339	376	377	379	384	424	425	427	431	475	476	478	483
		LO PR	126	128	131	136	134	135	138	144	140	142	145	150	146	147	150	156	151	153	156	161	158	160	163	168
	1000	MBh	30.0	31.0	32.0	33.0	30.0	30.0	31.0	33.0	29.0	30.0	31.0	32.0	28.0	28.0	29.0	31.0	26.0	27.0	28.0	29.0	25.0	25.0	26.0	28.0
		S/T	1.00	0.92	0.79	0.65	1.00	1.00	0.80	0.66	1.00	1.00	0.82	0.68	1.00	1.00	0.84	0.70	1.00	1.00	0.86	0.72	1.00	1.00	1.00	0.77
		ΔT	30	29	25	22	30	28	25	22	31	29	25	22	30	28	25	21	30	28	25	21	31	29	26	22
		KW	1.77	1.77	1.77	1.78	1.97	1.97	1.96	1.98	2.19	2.19	2.18	2.20	2.43	2.42	2.42	2.44	2.69	2.69	2.69	2.70	3.01	3.00	3.00	3.02
		Amps	6.4	6.4	6.4	6.5	7.3	7.3	7.3	7.4	8.3	8.3	8.3	8.4	9.4	9.4	9.4	9.5	10.7	10.7	10.6	10.7	12.1	12.1	12.1	12.1
		HI PR	253	255	256	261	293	294	296	300	334	335	337	341	379	380	381	386	426	427	429	434	477	479	480	485
		LO PR	128	129	133	138	135	137	140	145	142	144	147	152	148	149	152	158	153	155	158	163	160	161	165	170
	1125	MBh	31.0	31.0	32.0	33.0	31.0	31.0	32.0	33.0	30.0	30.0	31.0	32.0	28.0	29.0	30.0	31.0	27.0	27.0	28.0	29.0	25.0	26.0	27.0	28.0
		S/T	1.00	0.96	0.82	0.68	1.00	1.00	0.83	0.69	1.00	1.00	0.85	0.71	1.00	1.00	0.87	0.73	1.00	1.00	1.00	0.76	1.00	1.00	1.00	0.81
		ΔT	29	28	24	21	29	28	24	21	30	28	24	21	29	28	24	21	29	27	24	20	30	28	25	21
		KW	1.78	1.78	1.77	1.79	1.98	1.97	1.97	1.99	2.20	2.20	2.19	2.21	2.44	2.43	2.43	2.45	2.70	2.70	2.70	2.71	3.01	3.01	3.01	3.02
		Amps	6.5	6.5	6.5	6.5	7.4	7.4	7.4	7.4	8.4	8.4	8.4	8.4	9.5	9.5	9.5	9.5	10.7	10.7	10.7	10.7	12.1	12.1	12.1	12.2
		HI PR	256	257	258	263	295	296	298	302	336	337	339	343	381	382	383	388	428	430	431	436	480	481	482	487
		LO PR	130	131	135	140	137	139	142	147	144	146	149	154	150	151	154	160	155	157	160	165	162	163	167	172

IDB: Entering Indoor Dry Bulb Temperature

Shaded area reflects AHRI conditions

kW = Total system power

High and low pressures are measured at the liquid and suction service valves.

Amps = outdoor unit amps (comp.+fan)

Expanded Cooling Data — GSX140301N*+ CA*FA3626*6A*+EEP

			Outdoor Ambient Temperature																							
			65				75				85				95				105				115			
			Entering Indoor Wet Bulb Temperature																							
IDB	Airflow		59	63	67	71	59	63	67	71	59	63	67	71	59	63	67	71	59	63	67	71	59	63	67	71
70	875	MBh	29.1	29.5	30.4	-	28.8	29.2	30.1	-	28.1	28.5	29.4	-	26.8	27.2	28.0	-	25.2	25.6	26.5	-	23.7	24.1	25.0	-
		S/T	0.58	0.51	0.38	-	0.59	0.52	0.39	-	0.61	0.54	0.41	-	0.63	0.56	0.43	-	1.00	0.58	0.45	-	1.00	0.63	0.50	-
		ΔT	20	18	14	-	20	18	14	-	20	18	15	-	20	18	14	-	19	18	14	-	21	19	15	-
		KW	1.81	1.81	1.80	-	2.02	2.02	2.01	-	2.25	2.25	2.24	-	2.50	2.50	2.50	-	2.78	2.78	2.78	-	3.11	3.11	3.11	-
		Amps	6.6	6.6	6.6	-	7.6	7.6	7.5	-	8.6	8.6	8.6	-	9.8	9.8	9.8	-	11.1	11.1	11.0	-	12.6	12.6	12.6	-
		HI PR	247	248	250	-	286	287	289	-	327	328	330	-	371	372	374	-	418	419	421	-	469	470	472	-
		LO PR	121	123	126	-	129	130	133	-	135	137	140	-	141	142	145	-	146	147	151	-	153	154	157	-
	1000	MBh	29.5	29.9	30.8	-	29.2	29.6	30.5	-	28.5	28.9	29.7	-	27.2	27.6	28.4	-	25.6	26.0	26.8	-	24.1	24.5	25.4	-
		S/T	0.64	0.57	0.44	-	0.65	0.57	0.44	-	0.67	0.60	0.47	-	0.69	0.62	0.49	-	1.00	0.64	0.51	-	1.00	0.69	0.56	-
		ΔT	19	17	13	-	19	17	13	-	19	17	14	-	19	17	13	-	18	16	13	-	19	18	14	-
		KW	1.82	1.82	1.81	-	2.03	2.03	2.02	-	2.26	2.26	2.25	-	2.51	2.51	2.51	-	2.79	2.79	2.79	-	3.12	3.12	3.12	-
		Amps	6.7	6.7	6.6	-	7.6	7.6	7.6	-	8.7	8.7	8.7	-	9.8	9.8	9.8	-	11.1	11.1	11.1	-	12.6	12.6	12.6	-
		HI PR	249	250	252	-	288	289	291	-	329	330	332	-	373	374	376	-	420	421	423	-	471	472	474	-
		LO PR	123	125	128	-	130	132	135	-	137	138	141	-	142	144	147	-	148	149	152	-	154	156	159	-
	1125	MBh	29.9	30.3	31.2	-	29.7	30.1	31.0	-	28.9	29.3	30.2	-	27.6	28.0	28.9	-	26.0	26.4	27.3	-	24.6	25.0	25.8	-
		S/T	0.67	0.60	0.47	-	0.68	0.61	0.48	-	0.70	0.63	0.50	-	1.00	0.65	0.52	-	1.00	0.67	0.54	-	1.00	0.72	0.59	-
		ΔT	18	16	12	-	18	16	12	-	18	16	13	-	18	16	12	-	17	16	12	-	19	17	13	-
		KW	1.83	1.83	1.82	-	2.04	2.04	2.03	-	2.27	2.27	2.26	-	2.52	2.52	2.52	-	2.80	2.80	2.80	-	3.13	3.13	3.12	-
		Amps	6.7	6.7	6.7	-	7.7	7.7	7.6	-	8.7	8.7	8.7	-	9.9	9.9	9.9	-	11.2	11.2	11.1	-	12.7	12.7	12.6	-
		HI PR	251	252	254	-	290	291	293	-	331	332	334	-	375	376	378	-	422	423	425	-	473	474	476	-
		LO PR	125	127	130	-	132	134	137	-	139	140	143	-	144	146	149	-	150	151	154	-	156	158	161	-
75	875	MBh	29.1	29.5	30.4	31.7	28.9	29.3	30.1	31.5	28.1	28.5	29.4	30.7	26.8	**27.2**	28.1	29.4	25.2	25.6	26.5	27.8	23.7	24.1	25.0	26.3
		S/T	0.71	0.63	0.50	0.37	0.71	0.64	0.51	0.37	1.00	0.66	0.53	0.40	1.00	**0.68**	0.55	0.41	1.00	0.70	0.57	0.44	1.00	0.75	0.62	0.49
		ΔT	24	22	18	15	24	22	18	15	24	22	19	15	24	**22**	18	15	23	22	18	15	25	23	19	16
		KW	1.81	1.81	1.80	1.82	2.02	2.01	2.01	2.03	2.25	2.25	2.24	2.26	2.50	**2.50**	2.49	2.51	2.78	2.78	2.77	2.79	3.11	3.11	3.10	3.12
		Amps	6.6	6.6	6.6	6.7	7.6	7.6	7.5	7.6	8.6	8.6	8.6	8.7	9.8	**9.8**	9.8	9.8	11.1	11.1	11.0	11.1	12.6	12.6	12.5	12.6
		HI PR	247	248	250	254	286	287	289	293	327	328	330	334	371	**372**	374	378	419	420	421	426	469	470	472	476
		LO PR	121	123	126	131	129	130	133	138	135	137	140	145	141	**142**	145	150	146	147	151	156	153	154	157	162
	1000	MBh	29.5	29.9	30.8	32.1	29.2	29.6	30.5	31.8	28.5	28.9	29.8	31.1	27.2	**27.6**	28.4	29.8	25.6	26.0	26.9	28.2	24.1	24.5	25.4	26.7
		S/T	0.76	0.69	0.56	0.42	0.77	0.70	0.57	0.43	1.00	0.72	0.59	0.45	1.00	**0.74**	0.61	0.47	1.00	0.76	0.63	0.49	1.00	1.00	0.68	0.54
		ΔT	23	21	17	14	23	21	17	14	23	21	18	14	23	**21**	17	14	22	20	17	14	23	22	18	15
		KW	1.82	1.82	1.81	1.83	2.03	2.02	2.02	2.04	2.26	2.26	2.25	2.27	2.51	**2.51**	2.50	2.52	2.79	2.79	2.79	2.80	3.12	3.12	3.11	3.13
		Amps	6.7	6.7	6.6	6.7	7.6	7.6	7.6	7.7	8.7	8.7	8.7	8.7	9.8	**9.8**	9.8	9.9	11.1	11.1	11.1	11.2	12.6	12.6	12.6	12.7
		HI PR	249	250	252	256	288	289	291	295	329	330	332	336	373	**374**	376	380	421	422	423	428	471	472	474	478
		LO PR	123	125	128	133	130	132	135	140	137	138	141	147	142	**144**	147	152	148	149	152	157	154	156	159	164
	1125	MBh	30.0	30.4	31.2	32.6	29.7	30.1	31.0	32.3	28.9	29.3	30.2	31.5	27.6	**28.0**	28.9	30.2	26.0	26.4	27.3	28.6	24.6	25.0	25.9	27.2
		S/T	0.80	0.72	0.59	0.46	0.80	0.73	0.60	0.46	1.00	0.75	0.62	0.49	1.00	**0.77**	0.64	0.50	1.00	0.79	0.66	0.53	1.00	1.00	0.71	0.58
		ΔT	22	20	16	13	22	20	16	13	22	20	17	13	22	**20**	16	13	21	20	16	13	23	21	17	14
		KW	1.83	1.83	1.82	1.84	2.04	2.03	2.03	2.05	2.27	2.27	2.26	2.28	2.52	**2.52**	2.51	2.53	2.80	2.80	2.79	2.81	3.13	3.13	3.12	3.14
		Amps	6.7	6.7	6.7	6.8	7.7	7.7	7.6	7.7	8.7	8.7	8.7	8.8	9.9	**9.9**	9.8	9.9	11.2	11.1	11.1	11.2	12.7	12.7	12.6	12.7
		HI PR	251	252	254	259	290	291	293	298	331	332	334	338	375	**376**	378	382	423	424	425	430	473	474	476	480
		LO PR	125	127	130	135	132	134	137	142	139	140	143	149	144	**146**	149	154	150	151	154	159	156	158	161	166

IDB: Entering Indoor Dry Bulb Temperature

Shaded area reflects ACCA (TVA) conditions

kW = Total system power

High and low pressures are measured at the liquid and suction service valves.

Amps = outdoor unit amps (comp.+fan)

EXPANDED COOLING DATA — GSX140301N*+ CA*FA3626*6A*+EEP (CONT.)

			Outdoor Ambient Temperature																							
			65				75				85				95				105				115			
			Entering Indoor Wet Bulb Temperature																							
IDB	Airflow		59	63	67	71	59	63	67	71	59	63	67	71	59	63	67	71	59	63	67	71	59	63	67	71
80	875	MBh	29.3	29.7	30.5	31.9	29.0	29.4	30.3	31.6	28.2	28.7	29.5	30.9	26.9	27.3	28.2	29.5	25.3	25.8	26.6	27.9	23.9	24.3	25.2	26.5
		S/T	0.83	0.75	0.62	0.5	1.00	0.76	0.63	0.49	1.00	0.78	0.65	0.5	1.00	0.80	0.67	0.54	1.00	1.00	0.69	0.6	1.00	1.00	0.74	0.61
		ΔT	28	26	23	19	28	26	22	19	28	26	23	19	28	26	22	19	27	26	22	19	29	27	23	20
		KW	1.81	1.81	1.80	1.8	2.02	2.02	2.01	2.03	2.25	2.25	2.24	2.3	2.50	2.50	2.49	2.51	2.78	2.78	2.78	2.8	3.11	3.11	3.10	3.12
		Amps	6.6	6.6	6.6	6.7	7.6	7.6	7.5	7.6	8.6	8.6	8.6	8.7	9.8	9.8	9.8	9.8	11.1	11.1	11.0	11.1	12.6	12.6	12.6	12.6
		HI PR	248	249	251	255	287	288	290	294	328	329	330	335	372	373	374	379	419	420	422	426	470	471	472	477
		LO PR	122	123	126	132	129	131	134	139	136	137	140	145	141	143	146	151	146	148	151	156	153	155	158	163
	1000	MBh	29.6	30.1	30.9	32.3	29.4	29.8	30.7	32.0	28.6	29.0	29.9	31.2	27.3	27.7	**28.6**	29.9	25.7	26.1	27.0	28.3	24.3	24.7	25.5	26.9
		S/T	1.00	0.81	0.68	0.5	1.00	0.82	0.69	0.55	1.00	0.84	0.71	0.6	1.00	0.86	**0.73**	0.59	1.00	1.00	0.75	0.6	1.00	1.00	0.80	0.66
		ΔT	27	25	21	18	27	25	21	18	27	25	22	18	27	25	**21**	18	26	25	21	18	27	26	22	19
		KW	1.82	1.82	1.81	1.8	2.03	2.03	2.02	2.04	2.26	2.26	2.25	2.3	2.51	2.51	**2.51**	2.52	2.79	2.79	2.79	2.8	3.12	3.12	3.12	3.13
		Amps	6.7	6.7	6.6	6.7	7.6	7.6	7.6	7.7	8.7	8.7	8.7	8.7	9.8	9.8	**9.8**	9.9	11.1	11.1	11.1	11.2	12.6	12.6	12.6	12.7
		HI PR	250	251	253	257	289	290	292	296	330	331	332	337	374	375	**376**	381	421	422	424	428	472	473	474	479
		LO PR	124	125	128	133	131	132	136	141	137	139	142	147	143	144	**147**	153	148	150	153	158	155	156	160	165
	1125	MBh	30.1	30.5	31.4	32.7	29.8	30.3	31.1	32.5	29.1	29.5	30.4	31.7	27.8	28.2	29.1	30.4	26.2	26.6	27.5	28.8	24.7	25.1	26.0	27.3
		S/T	1.00	0.84	0.71	0.6	1.00	0.85	0.72	0.58	1.00	0.87	0.74	0.6	1.00	1.00	0.76	0.63	1.00	1.00	0.78	0.6	1.00	1.00	0.83	0.70
		ΔT	26	24	21	17	26	24	20	17	26	24	21	17	26	24	20	17	25	24	20	17	27	25	21	18
		KW	1.83	1.83	1.82	1.8	2.04	2.04	2.03	2.05	2.27	2.27	2.26	2.3	2.52	2.52	2.51	2.53	2.80	2.80	2.80	2.8	3.13	3.13	3.12	3.14
		Amps	6.7	6.7	6.7	6.8	7.7	7.7	7.6	7.7	8.7	8.7	8.7	8.8	9.9	9.9	9.9	9.9	11.2	11.2	11.1	11.2	12.7	12.7	12.6	12.7
		HI PR	252	253	255	259	291	292	294	298	332	333	335	339	376	377	378	383	423	424	426	430	474	475	477	481
		LO PR	126	127	130	135	133	134	138	143	139	141	144	149	145	146	149	155	150	152	155	160	157	158	162	167
85	875	MBh	29.8	30.2	31.0	32.4	29.5	29.9	30.8	32.1	28.7	29.1	30.0	31.3	27.4	27.8	28.7	30.0	25.8	26.2	27.1	28.4	24.4	24.8	25.7	27.0
		S/T	1.00	0.85	0.72	0.58	1.00	0.86	0.73	0.59	1.00	1.00	0.75	0.61	1.00	1.00	0.77	0.63	1.00	1.00	0.79	0.65	1.00	1.00	1.00	0.70
		ΔT	31	30	26	23	31	29	26	23	32	30	26	23	31	29	26	23	31	29	26	22	32	30	27	23
		KW	1.81	1.81	1.81	1.82	2.02	2.02	2.02	2.03	2.25	2.25	2.25	2.26	2.50	2.50	2.50	2.51	2.78	2.78	2.78	2.80	3.11	3.11	3.11	3.12
		Amps	6.6	6.6	6.6	6.7	7.6	7.6	7.6	7.6	8.7	8.6	8.6	8.7	9.8	9.8	9.8	9.9	11.1	11.1	11.1	11.1	12.6	12.6	12.6	12.6
		HI PR	249	250	252	256	288	289	291	295	329	330	332	336	373	374	376	380	420	421	423	427	471	472	474	478
		LO PR	124	125	128	133	131	133	136	141	137	139	142	147	143	144	148	153	148	150	153	158	155	157	160	165
	1000	MBh	30.1	30.5	31.4	32.7	29.9	30.3	31.2	32.5	29.1	29.5	30.4	31.7	27.8	28.2	29.1	30.4	26.2	26.6	27.5	28.8	24.8	25.2	26.0	27.4
		S/T	1.00	0.91	0.78	0.64	1.00	0.92	0.78	0.65	1.00	1.00	0.81	0.67	1.00	1.00	0.83	0.69	1.00	1.00	0.85	0.71	1.00	1.00	1.00	0.76
		ΔT	30	28	25	21	30	28	25	21	30	29	25	22	30	28	25	21	30	28	25	21	31	29	26	22
		KW	1.82	1.82	1.82	1.83	2.03	2.03	2.03	2.04	2.26	2.26	2.26	2.27	2.51	2.51	2.51	2.53	2.80	2.79	2.79	2.81	3.12	3.12	3.12	3.14
		Amps	6.7	6.7	6.7	6.7	7.6	7.6	7.6	7.7	8.7	8.7	8.7	8.8	9.9	9.8	9.8	9.9	11.1	11.1	11.1	11.2	12.6	12.6	12.6	12.7
		HI PR	251	252	254	258	290	291	293	297	331	332	334	338	375	376	378	382	422	423	425	429	473	474	476	480
		LO PR	125	127	130	135	133	134	137	143	139	141	144	149	145	146	149	154	150	152	155	160	157	158	161	167
	1125	MBh	30.6	31.0	31.9	33.2	30.3	30.7	31.6	32.9	29.6	30.0	30.9	32.2	28.3	28.7	29.5	30.9	26.7	27.1	28.0	29.3	25.2	25.6	26.5	27.8
		S/T	1.00	0.94	0.81	0.67	1.00	1.00	0.82	0.68	1.00	1.00	0.84	0.70	1.00	1.00	0.86	0.72	1.00	1.00	0.88	0.74	1.00	1.00	1.00	0.79
		ΔT	29	27	24	21	29	27	24	21	30	28	24	21	29	27	24	20	29	27	24	20	30	28	25	21
		KW	1.83	1.83	1.83	1.84	2.04	2.04	2.04	2.05	2.27	2.27	2.27	2.28	2.52	2.52	2.52	2.53	2.80	2.80	2.80	2.82	3.13	3.13	3.13	3.14
		Amps	6.7	6.7	6.7	6.8	7.7	7.7	7.7	7.7	8.7	8.7	8.7	8.8	9.9	9.9	9.9	9.9	11.2	11.2	11.2	11.2	12.7	12.7	12.7	12.7
		HI PR	253	254	256	260	292	293	295	299	333	334	336	340	377	378	380	384	424	425	427	431	475	476	478	482
		LO PR	127	129	132	137	135	136	139	145	141	143	146	151	147	148	151	156	152	154	157	162	159	160	163	169

IDB: Entering Indoor Dry Bulb Temperature

Shaded area reflects AHRI conditions

kW = Total system power

High and low pressures are measured at the liquid and suction service valves.

Amps = outdoor unit amps (comp.+fan)

Expanded Cooling Data — GSX140311** + CA*F3137*6** + EEP

			Outdoor Ambient Temperature																							
			65				75				85				95				105				115			
			Entering Indoor Wet Bulb Temperature																							
IDB	Airflow		59	63	67	71	59	63	67	71	59	63	67	71	59	63	67	71	59	63	67	71	59	63	67	71
70	875	MBh	29.1	29.5	30.4	-	28.8	29.2	30.1	-	28.1	28.5	29.4	-	26.8	27.2	28.0	-	25.2	25.6	26.5	-	23.7	24.1	25.0	-
		S/T	0.63	0.55	0.41	-	0.63	0.56	0.42	-	0.66	0.58	0.44	-	0.68	0.60	0.46	-	1.00	0.62	0.48	-	1.00	0.68	0.54	-
		ΔT	20	18	15	-	20	18	15	-	20	19	15	-	20	18	15	-	20	18	15	-	21	19	16	-
		KW	1.72	1.72	1.72	-	1.91	1.91	1.91	-	2.13	2.12	2.12	-	2.36	2.35	2.35	-	2.61	2.61	2.61	-	2.92	2.92	2.91	-
		Amps	6.2	6.2	6.2	-	7.1	7.1	7.1	-	8.1	8.0	8.0	-	9.1	9.1	9.1	-	10.3	10.3	10.3	-	11.7	11.7	11.7	-
		HI PR	244	245	247	-	282	283	285	-	323	324	325	-	366	367	369	-	413	414	416	-	463	464	466	-
		LO PR	123	124	127	-	130	132	135	-	137	138	141	-	142	144	147	-	148	149	152	-	154	156	159	-
	1000	MBh	29.5	29.9	30.8	-	29.2	29.6	30.5	-	28.5	28.9	29.7	-	27.2	27.6	28.4	-	25.6	26.0	26.8	-	24.1	24.5	25.4	-
		S/T	0.69	0.61	0.47	-	0.70	0.62	0.48	-	0.72	0.64	0.50	-	1.00	0.66	0.52	-	1.00	0.69	0.55	-	1.00	0.74	0.60	-
		ΔT	19	17	14	-	19	17	14	-	19	17	14	-	19	17	14	-	19	17	13	-	20	18	15	-
		KW	1.73	1.73	1.73	-	1.92	1.92	1.92	-	2.14	2.13	2.13	-	2.37	2.36	2.36	-	2.62	2.62	2.62	-	2.93	2.93	2.92	-
		Amps	6.2	6.2	6.2	-	7.1	7.1	7.1	-	8.1	8.1	8.1	-	9.2	9.2	9.1	-	10.3	10.3	10.3	-	11.7	11.7	11.7	-
		HI PR	246	247	249	-	284	286	287	-	325	326	328	-	368	369	371	-	415	416	418	-	465	466	468	-
		LO PR	124	126	129	-	132	133	136	-	138	140	143	-	144	145	149	-	149	151	154	-	156	158	161	-
	1125	MBh	29.9	30.3	31.2	-	29.7	30.1	31.0	-	28.9	29.3	30.2	-	27.6	28.0	28.9	-	26.0	26.4	27.3	-	24.6	25.0	25.8	-
		S/T	0.73	0.65	0.51	-	0.73	0.65	0.51	-	0.76	0.68	0.54	-	1.00	0.70	0.56	-	1.00	0.72	0.58	-	1.00	0.78	0.63	-
		ΔT	18	16	13	-	18	16	13	-	18	16	13	-	18	16	13	-	18	16	12	-	19	17	14	-
		KW	1.74	1.74	1.73	-	1.93	1.93	1.92	-	2.14	2.14	2.14	-	2.37	2.37	2.37	-	2.63	2.63	2.63	-	2.94	2.93	2.93	-
		Amps	6.3	6.3	6.3	-	7.2	7.2	7.1	-	8.1	8.1	8.1	-	9.2	9.2	9.2	-	10.4	10.4	10.4	-	11.8	11.8	11.7	-
		HI PR	248	249	251	-	286	288	289	-	327	328	330	-	370	371	373	-	417	418	420	-	467	468	470	-
		LO PR	126	128	131	-	134	135	138	-	140	142	145	-	146	147	151	-	151	153	156	-	158	160	163	-
75	875	MBh	29.1	29.5	30.4	31.7	28.9	29.3	30.1	31.5	28.1	28.5	29.4	30.7	26.8	**27.2**	28.1	29.4	25.2	25.6	26.5	27.8	23.7	24.1	25.0	26.3
		S/T	0.76	0.68	0.54	0.39	0.77	0.69	0.55	0.40	1.00	0.72	0.57	0.43	1.00	**0.74**	0.60	0.45	1.00	0.76	0.62	0.47	1.00	1.00	0.67	0.52
		ΔT	24	22	19	15	24	22	19	15	25	23	19	16	24	**22**	19	15	24	22	19	15	25	23	20	16
		KW	1.72	1.72	1.71	1.73	1.91	1.91	1.91	1.92	2.12	2.12	2.12	2.13	2.36	**2.35**	2.35	2.36	2.61	2.61	2.61	2.62	2.92	2.92	2.91	2.93
		Amps	6.2	6.2	6.2	6.2	7.1	7.1	7.1	7.1	8.0	8.0	8.0	8.1	9.1	**9.1**	9.1	9.2	10.3	10.3	10.3	10.3	11.7	11.7	11.7	11.7
		HI PR	244	245	247	251	283	284	285	290	323	324	326	330	366	**367**	369	373	413	414	416	420	463	464	466	470
		LO PR	123	124	127	132	130	132	135	140	137	138	141	146	142	**144**	147	152	148	149	152	157	154	156	159	164
	1000	MBh	29.5	29.9	30.8	32.1	29.2	29.6	30.5	31.8	28.5	28.9	29.8	31.1	27.2	**27.6**	28.4	29.8	25.6	26.0	26.9	28.2	24.1	24.5	25.4	26.7
		S/T	0.82	0.75	0.60	0.46	0.83	0.75	0.61	0.46	1.00	0.78	0.64	0.49	1.00	**0.80**	0.66	0.51	1.00	0.82	0.68	0.53	1.00	1.00	0.73	0.59
		ΔT	23	21	18	14	23	21	18	14	23	22	18	14	23	**21**	18	14	23	21	18	14	24	22	19	15
		KW	1.73	1.73	1.72	1.74	1.92	1.92	1.92	1.93	2.13	2.13	2.13	2.14	2.37	**2.36**	2.36	2.37	2.62	2.62	2.62	2.63	2.93	2.92	2.92	2.94
		Amps	6.2	6.2	6.2	6.3	7.1	7.1	7.1	7.2	8.1	8.1	8.1	8.1	9.2	**9.1**	9.1	9.2	10.3	10.3	10.3	10.4	11.7	11.7	11.7	11.8
		HI PR	246	247	249	253	285	286	287	292	325	326	328	332	368	**369**	371	375	415	416	418	422	465	466	468	472
		LO PR	124	126	129	134	132	133	137	142	138	140	143	148	144	**145**	149	154	149	151	154	159	156	158	161	166
	1125	MBh	30.0	30.4	31.2	32.6	29.7	30.1	31.0	32.3	28.9	29.3	30.2	31.5	27.6	**28.0**	28.9	30.2	26.0	26.4	27.3	28.6	24.6	25.0	25.9	27.2
		S/T	0.86	0.78	0.64	0.49	1.00	0.79	0.65	0.50	1.00	0.81	0.67	0.52	1.00	**0.83**	0.69	0.54	1.00	0.86	0.72	0.57	1.00	1.00	0.77	0.62
		ΔT	22	20	17	13	22	20	17	13	22	21	17	13	22	**20**	17	13	22	20	17	13	23	21	18	14
		KW	1.74	1.74	1.73	1.75	1.93	1.93	1.92	1.94	2.14	2.14	2.14	2.15	2.37	**2.37**	2.37	2.38	2.63	2.63	2.63	2.64	2.93	2.93	2.93	2.94
		Amps	6.3	6.3	6.3	6.3	7.2	7.1	7.1	7.2	8.1	8.1	8.1	8.2	9.2	**9.2**	9.2	9.2	10.4	10.4	10.4	10.4	11.8	11.8	11.7	11.8
		HI PR	248	249	251	255	287	288	289	294	327	328	330	334	370	**371**	373	377	417	418	420	424	467	468	470	474
		LO PR	126	128	131	136	134	135	139	144	140	142	145	150	146	**147**	151	156	151	153	156	161	158	160	163	168

IDB: Entering Indoor Dry Bulb Temperature

Shaded area reflects ACCA (TVA) conditions

kW = Total system power

High and low pressures are measured at the liquid and suction service valves.

Amps = outdoor unit amps (comp.+fan)

EXPANDED COOLING DATA — GSX140311** + CA*F3137*6** + EEP (CONT.)

			Outdoor Ambient Temperature																							
			65				75				85				95				105				115			
			Entering Indoor Wet Bulb Temperature																							
IDB	Airflow		59	63	67	71	59	63	67	71	59	63	67	71	59	63	67	71	59	63	67	71	59	63	67	71
80	875	MBh	29.3	29.7	30.5	31.9	29.0	29.4	30.3	31.6	28.2	28.7	29.5	30.9	26.9	27.3	28.2	29.5	25.3	25.8	26.6	27.9	23.9	24.3	25.2	26.5
		S/T	1.00	0.81	0.67	0.5	1.00	0.82	0.68	0.53	1.00	0.85	0.70	0.6	1.00	0.87	0.73	0.58	1.00	1.00	0.75	0.6	1.00	1.00	0.80	0.65
		ΔT	28	27	23	19	28	27	23	19	29	27	23	20	28	27	23	19	28	26	23	19	29	27	24	20
		KW	1.72	1.72	1.72	1.7	1.91	1.91	1.91	1.92	2.12	2.12	2.12	2.1	2.36	2.35	2.35	2.37	2.61	2.61	2.61	2.6	2.92	2.92	2.91	2.93
		Amps	6.2	6.2	6.2	6.2	7.1	7.1	7.1	7.1	8.1	8.0	8.0	8.1	9.1	9.1	9.1	9.2	10.3	10.3	10.3	10.3	11.7	11.7	11.7	11.7
		HI PR	245	246	247	252	283	284	286	290	323	324	326	330	367	368	370	374	414	415	416	421	464	465	466	471
		LO PR	123	125	128	133	131	132	135	140	137	139	142	147	143	144	147	153	148	150	153	158	155	156	160	165
	1000	MBh	29.6	30.1	30.9	32.3	29.4	29.8	30.7	32.0	28.6	29.0	29.9	31.2	27.3	27.7	**28.6**	29.9	25.7	26.1	27.0	28.3	24.3	24.7	25.5	26.9
		S/T	1.00	0.88	0.73	0.6	1.00	0.88	0.74	0.59	1.00	0.91	0.77	0.6	1.00	1.00	**0.79**	0.64	1.00	1.00	0.81	0.7	1.00	1.00	0.86	0.72
		ΔT	27	25	22	18	27	25	22	18	28	26	22	19	27	25	**22**	18	27	25	22	18	28	26	23	19
		KW	1.73	1.73	1.72	1.7	1.92	1.92	1.92	1.93	2.13	2.13	2.13	2.1	2.37	2.36	**2.36**	2.38	2.62	2.62	2.62	2.6	2.93	2.93	2.92	2.94
		Amps	6.2	6.2	6.2	6.3	7.1	7.1	7.1	7.2	8.1	8.1	8.1	8.1	9.2	9.2	**9.1**	9.2	10.3	10.3	10.3	10.4	11.7	11.7	11.7	11.8
		HI PR	247	248	249	254	285	286	288	292	325	326	328	332	369	370	**372**	376	416	417	418	423	466	467	468	473
		LO PR	125	126	130	135	132	134	137	142	139	140	144	149	144	146	**149**	154	150	151	155	160	157	158	161	167
	1125	MBh	30.1	30.5	31.4	32.7	29.8	30.3	31.1	32.5	29.1	29.5	30.4	31.7	27.8	28.2	29.1	30.4	26.2	26.6	27.5	28.8	24.7	25.1	26.0	27.3
		S/T	1.00	0.91	0.77	0.6	1.00	0.92	0.78	0.63	1.00	0.94	0.80	0.7	1.00	1.00	0.82	0.67	1.00	1.00	0.85	0.7	1.00	1.00	0.90	0.75
		ΔT	26	25	21	17	26	24	21	17	27	25	21	18	26	24	21	17	26	24	21	17	27	25	22	18
		KW	1.74	1.74	1.73	1.8	1.93	1.93	1.92	1.94	2.14	2.14	2.14	2.2	2.37	2.37	2.37	2.38	2.63	2.63	2.63	2.6	2.94	2.93	2.93	2.95
		Amps	6.3	6.3	6.3	6.3	7.2	7.2	7.1	7.2	8.1	8.1	8.1	8.2	9.2	9.2	9.2	9.2	10.4	10.4	10.4	10.4	11.8	11.8	11.7	11.8
		HI PR	249	250	251	256	287	288	290	294	327	328	330	334	371	372	374	378	418	419	420	425	468	469	470	475
		LO PR	127	128	132	137	134	136	139	144	141	142	146	151	146	148	151	156	152	153	157	162	159	160	163	169
85	875	MBh	29.8	30.2	31.0	32.4	29.5	29.9	30.8	32.1	28.7	29.1	30.0	31.3	27.4	27.8	28.7	30.0	25.8	26.2	27.1	28.4	24.4	24.8	25.7	27.0
		S/T	1.00	0.92	0.78	0.63	1.00	0.92	0.78	0.64	1.00	1.00	0.81	0.66	1.00	1.00	0.83	0.68	1.00	1.00	0.85	0.70	1.00	1.00	1.00	0.76
		ΔT	32	30	27	23	32	30	27	23	32	30	27	23	32	30	27	23	32	30	26	23	33	31	28	24
		KW	1.72	1.72	1.72	1.73	1.91	1.91	1.91	1.92	2.13	2.13	2.12	2.14	2.36	2.36	2.36	2.37	2.62	2.62	2.61	2.63	2.92	2.92	2.92	2.93
		Amps	6.2	6.2	6.2	6.3	7.1	7.1	7.1	7.1	8.1	8.1	8.0	8.1	9.1	9.1	9.1	9.2	10.3	10.3	10.3	10.4	11.7	11.7	11.7	11.7
		HI PR	246	247	248	253	284	285	287	291	325	326	327	332	368	369	371	375	415	416	417	422	465	466	467	472
		LO PR	125	127	130	135	132	134	137	142	139	141	144	149	145	146	149	154	150	151	155	160	157	158	161	167
	1000	MBh	30.1	30.5	31.4	32.7	29.9	30.3	31.2	32.5	29.1	29.5	30.4	31.7	27.8	28.2	29.1	30.4	26.2	26.6	27.5	28.8	24.8	25.2	26.0	27.4
		S/T	1.00	0.98	0.84	0.69	1.00	1.00	0.85	0.70	1.00	1.00	0.87	0.72	1.00	1.00	0.89	0.74	1.00	1.00	0.92	0.77	1.00	1.00	1.00	0.82
		ΔT	31	29	26	22	31	29	26	22	31	29	26	22	31	29	26	22	31	29	25	22	32	30	26	23
		KW	1.73	1.73	1.73	1.74	1.92	1.92	1.92	1.93	2.14	2.14	2.13	2.15	2.37	2.37	2.36	2.38	2.63	2.63	2.62	2.64	2.93	2.93	2.93	2.94
		Amps	6.3	6.3	6.2	6.3	7.1	7.1	7.1	7.2	8.1	8.1	8.1	8.2	9.2	9.2	9.2	9.2	10.4	10.4	10.3	10.4	11.7	11.7	11.7	11.8
		HI PR	248	249	251	255	286	287	289	293	327	328	329	334	370	371	373	377	417	418	420	424	467	468	470	474
		LO PR	127	128	131	137	134	136	139	144	141	142	145	151	146	148	151	156	152	153	156	162	159	160	163	168
	1125	MBh	30.6	31.0	31.9	33.2	30.3	30.7	31.6	32.9	29.6	30.0	30.9	32.2	28.3	28.7	29.5	30.9	26.7	27.1	28.0	29.3	25.2	25.6	26.5	27.8
		S/T	1.00	1.00	0.87	0.73	1.00	1.00	0.88	0.73	1.00	1.00	0.91	0.76	1.00	1.00	0.93	0.78	1.00	1.00	1.00	0.80	1.00	1.00	1.00	0.86
		ΔT	30	28	25	21	30	28	25	21	30	28	25	21	30	28	25	21	30	28	24	21	31	29	26	22
		KW	1.74	1.74	1.74	1.75	1.93	1.93	1.93	1.94	2.15	2.15	2.14	2.16	2.38	2.38	2.37	2.39	2.64	2.63	2.63	2.65	2.94	2.94	2.93	2.95
		Amps	6.3	6.3	6.3	6.3	7.2	7.2	7.2	7.2	8.2	8.1	8.1	8.2	9.2	9.2	9.2	9.3	10.4	10.4	10.4	10.4	11.8	11.8	11.8	11.8
		HI PR	250	251	253	257	288	289	291	295	329	330	331	336	372	373	375	379	419	420	422	426	469	470	472	476
		LO PR	129	130	133	139	136	138	141	146	143	144	147	153	148	150	153	158	154	155	158	164	161	162	165	170

IDB: Entering Indoor Dry Bulb Temperature

Shaded area reflects AHRI conditions

kW = Total system power

High and low pressures are measured at the liquid and suction service valves.

Amps = outdoor unit amps (comp.+fan)

Expanded Cooling Data — GSX140361** + CA*F3642*6** + EEP

			Outdoor Ambient Temperature																							
			65				75				85				95				105				115			
			Entering Indoor Wet Bulb Temperature																							
IDB	Airflow		59	63	67	71	59	63	67	71	59	63	67	71	59	63	67	71	59	63	67	71	59	63	67	71
70	1050	MBh	34.8	35.3	36.3	-	34.5	35.0	36.0	-	33.6	34.1	35.1	-	32.0	32.5	33.5	-	30.1	30.6	31.6	-	28.4	28.8	29.9	-
		S/T	0.59	0.52	0.38	-	0.60	0.52	0.39	-	0.62	0.55	0.42	-	0.64	0.57	0.43	-	1.00	0.59	0.46	-	1.00	0.64	0.51	-
		ΔT	19	17	14	-	19	17	14	-	19	18	14	-	19	17	14	-	19	17	14	-	20	18	15	-
		KW	2.09	2.09	2.09	-	2.32	2.32	2.32	-	2.58	2.58	2.58	-	2.87	2.86	2.86	-	3.18	3.18	3.17	-	3.55	3.55	3.54	-
		Amps	7.6	7.6	7.5	-	8.6	8.6	8.6	-	9.8	9.8	9.8	-	11.1	11.1	11.1	-	12.5	12.5	12.5	-	14.2	14.2	14.2	-
		HI PR	254	255	257	-	294	295	297	-	336	337	339	-	381	382	384	-	430	431	433	-	482	483	485	-
		LO PR	121	123	126	-	129	130	133	-	135	137	140	-	141	142	145	-	146	147	151	-	153	154	157	-
	1200	MBh	35.3	35.7	36.8	-	34.9	35.4	36.5	-	34.0	34.5	35.6	-	32.5	33.0	34.0	-	30.6	31.0	32.1	-	28.8	29.3	30.3	-
		S/T	0.65	0.58	0.44	-	0.66	0.58	0.45	-	0.68	0.61	0.47	-	0.70	0.63	0.49	-	1.00	0.65	0.51	-	1.00	0.70	0.56	-
		ΔT	18	16	13	-	18	16	13	-	18	17	13	-	18	16	13	-	18	16	13	-	19	17	14	-
		KW	2.10	2.10	2.10	-	2.34	2.33	2.33	-	2.60	2.59	2.59	-	2.88	2.88	2.87	-	3.19	3.19	3.19	-	3.56	3.56	3.55	-
		Amps	7.6	7.6	7.6	-	8.7	8.7	8.7	-	9.9	9.9	9.9	-	11.2	11.2	11.1	-	12.6	12.6	12.6	-	14.3	14.3	14.3	-
		HI PR	256	257	259	-	296	297	299	-	338	339	341	-	384	385	386	-	432	433	435	-	484	485	487	-
		LO PR	123	125	128	-	130	132	135	-	137	138	141	-	142	144	147	-	148	149	152	-	154	156	159	-
	1350	MBh	35.8	36.3	37.3	-	35.5	36.0	37.0	-	34.6	35.1	36.1	-	33.0	33.5	34.5	-	31.1	31.6	32.6	-	29.4	29.9	30.9	-
		S/T	0.68	0.61	0.48	-	0.69	0.61	0.48	-	0.71	0.64	0.51	-	1.00	0.66	0.53	-	1.00	0.68	0.55	-	1.00	0.73	0.60	-
		ΔT	17	15	12	-	17	15	12	-	17	16	12	-	17	15	12	-	17	15	12	-	18	16	13	-
		KW	2.11	2.11	2.11	-	2.35	2.34	2.34	-	2.61	2.60	2.60	-	2.89	2.89	2.88	-	3.20	3.20	3.20	-	3.57	3.57	3.56	-
		Amps	7.7	7.7	7.6	-	8.7	8.7	8.7	-	9.9	9.9	9.9	-	11.2	11.2	11.2	-	12.7	12.6	12.6	-	14.3	14.3	14.3	-
		HI PR	258	259	261	-	298	300	301	-	340	342	343	-	386	387	389	-	434	435	437	-	486	488	489	-
		LO PR	125	127	130	-	132	134	137	-	139	140	143	-	144	146	149	-	150	151	154	-	156	158	161	-
75	1050	MBh	34.8	35.3	36.3	37.9	34.5	35.0	36.0	37.6	33.6	34.1	35.1	36.7	32.0	**32.5**	33.6	35.2	30.1	30.6	31.7	33.2	28.4	28.9	29.9	31.5
		S/T	0.72	0.64	0.51	0.37	0.72	0.65	0.52	0.38	1.00	0.67	0.54	0.40	1.00	**0.69**	0.56	0.42	1.00	0.71	0.58	0.44	1.00	0.76	0.63	0.49
		ΔT	23	21	18	15	23	21	18	15	23	22	18	15	23	**21**	18	15	23	21	18	14	24	22	19	15
		KW	2.09	2.09	2.08	2.10	2.32	2.32	2.32	2.33	2.58	2.58	2.58	2.59	2.86	**2.86**	2.86	2.88	3.18	3.18	3.17	3.19	3.55	3.54	3.54	3.56
		Amps	7.6	7.6	7.5	8.0	8.6	8.6	8.6	8.7	9.8	9.8	9.8	10.0	11.1	**11.1**	11.1	11.2	12.5	12.5	12.5	13.0	14.2	14.2	14.2	14.3
		HI PR	254	255	257	262	294	295	297	302	336	337	339	344	382	**383**	384	389	430	431	433	438	482	484	485	490
		LO PR	121	123	126	131	129	130	133	138	135	137	140	145	141	**142**	145	150	146	147	151	156	153	154	157	162
	1200	MBh	35.3	35.8	36.8	38.4	35.0	35.5	36.5	38.1	34.1	34.5	35.6	37.2	32.5	**33.0**	34.0	35.6	30.6	31.1	32.1	33.7	28.8	29.3	30.4	32.0
		S/T	0.78	0.70	0.57	0.43	0.78	0.71	0.58	0.44	1.00	0.73	0.60	0.46	1.00	**0.75**	0.62	0.48	1.00	0.77	0.64	0.50	1.00	1.00	0.69	0.55
		ΔT	22	20	17	14	22	20	17	13	22	20	17	14	22	**20**	17	13	22	20	17	13	23	21	18	14
		KW	2.10	2.10	2.10	2.11	2.33	2.33	2.33	2.35	2.59	2.59	2.59	2.61	2.88	**2.87**	2.87	2.89	3.19	3.19	3.18	3.20	3.56	3.56	3.55	3.57
		Amps	7.6	7.6	7.6	8.0	8.7	8.7	8.7	9.0	9.9	9.9	9.8	10.0	11.2	**11.2**	11.1	11.0	12.6	12.6	12.6	13.0	14.3	14.3	14.3	14.0
		HI PR	256	258	259	264	297	298	299	304	339	340	341	346	384	**385**	387	391	433	434	435	440	485	486	487	492
		LO PR	123	125	128	133	130	132	135	140	137	138	141	147	142	**144**	147	152	148	149	152	157	154	156	159	164
	1350	MBh	35.8	36.3	37.4	38.9	35.5	36.0	37.0	38.6	34.6	35.1	36.1	37.7	33.0	**33.5**	34.6	36.2	31.1	31.6	32.7	34.2	29.4	29.9	30.9	32.5
		S/T	0.81	0.73	0.60	0.46	0.82	0.74	0.61	0.47	1.00	0.77	0.63	0.49	1.00	**0.78**	0.65	0.51	1.00	0.81	0.67	0.53	1.00	1.00	0.72	0.58
		ΔT	21	19	16	13	21	19	16	13	21	20	16	13	21	**19**	16	13	21	19	16	12	22	20	17	13
		KW	2.11	2.11	2.11	2.12	2.34	2.34	2.34	2.36	2.60	2.60	2.60	2.62	2.89	**2.88**	2.88	2.90	3.20	3.20	3.19	3.21	3.57	3.57	3.56	3.58
		Amps	7.7	7.7	7.6	8.0	8.7	8.7	8.7	9.0	9.9	9.9	9.9	10.0	11.2	**11.2**	11.2	11.0	12.6	12.6	12.6	13.0	14.3	14.3	14.3	14.0
		HI PR	259	260	261	266	299	300	302	306	341	342	344	348	386	**387**	389	393	435	436	438	442	487	488	490	494
		LO PR	125	127	130	135	132	134	137	142	139	140	143	149	144	**146**	149	154	150	151	154	159	156	158	161	166

IDB: Entering Indoor Dry Bulb Temperature

Shaded area reflects ACCA (TVA) conditions

kW = Total system power

High and low pressures are measured at the liquid and suction service valves.

Amps = outdoor unit amps (comp.+fan)

			Outdoor Ambient Temperature																							
			65				75				85				95				105				115			
			Entering Indoor Wet Bulb Temperature																							
IDB	Airflow		59	63	67	71	59	63	67	71	59	63	67	71	59	63	67	71	59	63	67	71	59	63	67	71
80	1050	MBh	35.0	35.5	36.5	38.1	34.7	35.2	36.2	37.8	33.8	34.3	35.3	36.9	32.2	32.7	33.7	35.3	30.3	30.8	31.8	33.4	28.6	29.0	30.1	31.7
		S/T	0.84	0.77	0.63	0.5	1.00	0.77	0.64	0.50	1.00	0.80	0.66	0.5	1.00	0.82	0.68	0.54	1.00	1.00	0.70	0.6	1.00	1.00	0.75	0.61
		ΔT	27	25	22	19	27	25	22	18	27	25	22	19	27	25	22	18	27	25	22	18	28	26	23	19
		KW	2.09	2.09	2.09	2.1	2.32	2.32	2.32	2.34	2.58	2.58	2.58	2.6	2.86	2.86	2.86	2.88	3.18	3.18	3.17	3.2	3.55	3.55	3.54	3.56
		Amps	7.6	7.6	7.5	8.0	8.6	8.6	8.6	9.0	9.8	9.8	9.8	10.0	11.1	11.1	11.1	11.0	12.5	12.5	12.5	13.0	14.2	14.2	14.2	14.0
		HI PR	255	256	258	262	295	296	298	302	337	338	340	344	382	383	385	389	431	432	434	438	483	484	486	490
		LO PR	122	123	126	132	129	131	134	139	136	137	140	145	141	143	146	151	146	148	151	156	153	155	158	163
	1200	MBh	35.5	35.9	37.0	38.6	35.1	35.6	36.7	38.3	34.2	34.7	35.8	37.4	32.7	33.2	**34.2**	35.8	30.8	31.2	32.3	33.9	29.0	29.5	30.5	32.1
		S/T	1.00	0.82	0.69	0.6	1.00	0.83	0.70	0.56	1.00	0.85	0.72	0.6	1.00	0.87	**0.74**	0.60	1.00	1.00	0.76	0.6	1.00	1.00	0.81	0.67
		ΔT	26	24	21	17	26	24	21	17	26	24	21	18	26	24	**21**	17	26	24	21	17	27	25	22	18
		KW	2.10	2.10	2.10	2.1	2.34	2.33	2.33	2.35	2.60	2.59	2.59	2.6	2.88	2.87	**2.87**	2.89	3.19	3.19	3.19	3.2	3.56	3.56	3.55	3.57
		Amps	7.6	7.6	7.6	8.0	8.7	8.7	8.7	9.0	9.9	9.9	9.9	10.0	11.2	11.2	**11.1**	11.0	12.6	12.6	12.6	13.0	14.3	14.3	14.3	14.0
		HI PR	257	258	260	264	297	298	300	304	339	340	342	346	384	385	**387**	392	433	434	436	440	485	486	488	492
		LO PR	124	125	128	133	131	132	136	141	137	139	142	147	143	144	**147**	153	148	150	153	158	155	156	160	165
	1350	MBh	36.0	36.5	37.5	39.1	35.7	36.2	37.2	38.8	34.8	35.3	36.3	37.9	33.2	33.7	34.7	36.3	31.3	31.8	32.8	34.4	29.6	30.1	31.1	32.7
		S/T	1.00	0.86	0.72	0.6	1.00	0.86	0.73	0.59	1.00	0.89	0.76	0.6	1.00	1.00	0.77	0.63	1.00	1.00	0.80	0.7	1.00	1.00	0.85	0.71
		ΔT	25	23	20	17	25	23	20	17	25	24	20	17	25	23	20	16	25	23	20	16	26	24	21	17
		KW	2.11	2.11	2.11	2.1	2.35	2.34	2.34	2.36	2.61	2.60	2.60	2.6	2.89	2.89	2.88	2.90	3.20	3.20	3.20	3.2	3.57	3.57	3.56	4.00
		Amps	7.7	7.7	7.6	8.0	9.0	8.7	8.7	9.0	9.9	9.9	9.9	10.0	11.2	11.2	11.2	11.0	12.7	12.6	12.6	13.0	14.3	14.3	14.3	14.0
		HI PR	259	260	262	266	299	300	302	306	341	342	344	348	386	387	389	394	435	436	438	442	487	488	490	494
		LO PR	126	127	130	135	133	134	138	143	139	141	144	149	145	146	149	155	150	152	155	160	157	158	162	167
85	1050	MBh	35.6	36.1	37.1	38.7	35.3	35.8	36.8	38.4	34.4	34.9	35.9	37.5	32.8	33.3	34.3	35.9	30.9	31.4	32.4	34.0	29.1	29.6	30.7	32.3
		S/T	1.00	0.86	0.73	0.59	1.00	0.87	0.74	0.60	1.00	1.00	0.76	0.62	1.00	1.00	0.78	0.64	1.00	1.00	0.80	0.66	1.00	1.00	1.00	0.71
		ΔT	31	29	25	22	30	29	25	22	31	29	26	22	30	29	25	22	30	28	25	22	31	30	26	23
		KW	2.10	2.09	2.09	2.11	2.33	2.33	2.32	2.34	2.59	2.59	2.58	2.60	2.87	2.87	2.86	2.88	3.18	3.18	3.18	3.20	3.55	3.55	3.55	3.56
		Amps	7.6	7.6	7.6	8.0	8.7	8.6	8.6	9.0	9.8	9.8	9.8	10.0	11.1	11.1	11.1	11.0	12.6	12.6	12.5	13.0	14.3	14.2	14.2	14.0
		HI PR	256	257	259	263	296	297	299	303	338	339	341	345	383	384	386	391	432	433	435	439	484	485	487	491
		LO PR	124	125	128	133	131	133	136	141	137	139	142	147	143	144	148	153	148	150	153	158	155	157	160	165
	1200	MBh	36.0	36.5	37.6	39.2	35.7	36.2	37.3	38.8	34.8	35.3	36.3	37.9	33.3	33.7	34.8	36.4	31.3	31.8	32.9	34.5	29.6	30.1	31.1	32.7
		S/T	1.00	0.92	0.79	0.65	1.00	0.93	0.80	0.66	1.00	1.00	0.82	0.68	1.00	1.00	0.84	0.70	1.00	1.00	0.86	0.72	1.00	1.00	1.00	0.77
		ΔT	29	28	24	21	29	28	24	21	30	28	25	21	29	28	24	21	29	27	24	21	30	28	25	22
		KW	2.11	2.11	2.10	2.12	2.34	2.34	2.33	2.35	2.60	2.60	2.59	2.61	2.88	2.88	2.88	2.89	3.20	3.19	3.19	3.21	3.56	3.56	3.56	3.58
		Amps	7.6	7.6	7.6	8.0	8.7	8.7	8.7	9.0	9.9	9.9	9.9	10.0	11.2	11.2	11.2	11.0	12.6	12.6	12.6	13.0	14.3	14.3	14.3	14.0
		HI PR	258	259	261	265	298	299	301	306	340	341	343	348	385	387	388	393	434	435	437	442	486	487	489	494
		LO PR	125	127	130	135	133	134	137	143	139	141	144	149	145	146	149	154	150	152	155	160	157	158	161	167
	1350	MBh	36.6	37.1	38.1	39.7	36.3	36.8	37.8	39.4	35.4	35.9	36.9	38.5	33.8	34.3	35.3	36.9	31.9	32.4	33.4	35.0	30.1	30.6	31.7	33.3
		S/T	1.00	0.96	0.82	0.68	1.00	1.00	0.83	0.69	1.00	1.00	0.85	0.71	1.00	1.00	0.87	0.73	1.00	1.00	0.89	0.76	1.00	1.00	1.00	0.81
		ΔT	29	27	23	20	29	27	23	20	29	27	24	20	28	27	23	20	28	26	23	20	29	28	24	21
		KW	2.12	2.12	2.11	2.13	2.35	2.35	2.34	2.36	2.61	2.61	2.60	2.62	2.89	2.89	2.89	2.90	3.21	3.20	3.20	3.22	3.57	3.57	3.57	3.59
		Amps	7.7	7.7	7.7	8.0	8.8	8.7	8.7	9.0	9.9	9.9	9.9	10.0	11.2	11.2	11.2	11.0	12.7	12.7	12.6	13.0	14.4	14.3	14.3	14.0
		HI PR	260	261	263	268	300	301	303	308	342	343	345	350	388	389	390	395	436	437	439	444	488	489	491	496
		LO PR	127	129	132	137	135	136	139	145	141	143	146	151	147	148	151	156	152	154	157	162	159	160	163	169

IDB: Entering Indoor Dry Bulb Temperature

Shaded area reflects AHRI conditions

kW = Total system power

High and low pressures are measured at the liquid and suction service valves.

Amps = outdoor unit amps (comp.+fan)

Expanded Cooling Data — GSX140371** + CA*F3137*6** + EEP

			Outdoor Ambient Temperature																							
			65				75				85				95				105				115			
			Entering Indoor Wet Bulb Temperature																							
IDB	Airflow		59	63	67	71	59	63	67	71	59	63	67	71	59	63	67	71	59	63	67	71	59	63	67	71
70	1100	MBh	35.0	35.5	36.6	-	34.7	35.2	36.3	-	33.8	34.3	35.4	-	32.3	32.8	33.8	-	30.4	30.9	31.9	-	28.6	29.1	30.2	-
		S/T	0.66	0.59	0.45	-	0.67	0.59	0.46	-	0.70	0.62	0.48	-	0.71	0.64	0.50	-	1.00	0.66	0.53	-	1.00	0.71	0.58	-
		ΔT	20	18	14	-	20	18	14	-	20	18	14	-	19	18	14	-	19	17	14	-	20	19	15	-
		KW	2.03	2.03	2.02	-	2.26	2.26	2.26	-	2.53	2.53	2.52	-	2.81	2.81	2.81	-	3.13	3.13	3.13	-	3.51	3.50	3.50	-
		Amps	7.4	7.4	7.4	-	8.5	8.5	8.5	-	9.7	9.7	9.7	-	11.0	11.0	11.0	-	12.5	12.5	12.5	-	14.2	14.2	14.2	-
		HI PR	255	256	258	-	295	296	298	-	337	338	340	-	382	383	385	-	430	431	433	-	482	483	485	-
		LO PR	122	123	126	-	129	130	134	-	135	137	140	-	141	142	145	-	146	148	151	-	153	154	157	-
	1200	MBh	35.4	35.9	37.0	-	35.1	35.6	36.6	-	34.2	34.7	35.7	-	32.7	33.2	34.2	-	30.8	31.3	32.3	-	29.0	29.5	30.6	-
		S/T	0.69	0.62	0.48	-	0.70	0.62	0.49	-	0.72	0.65	0.51	-	0.74	0.67	0.53	-	1.00	0.69	0.55	-	1.00	0.74	0.60	-
		ΔT	19	17	13	-	19	17	13	-	19	17	14	-	19	17	13	-	19	17	13	-	20	18	14	-
		KW	2.04	2.03	2.03	-	2.27	2.27	2.27	-	2.54	2.53	2.53	-	2.82	2.82	2.82	-	3.14	3.14	3.13	-	3.51	3.51	3.51	-
		Amps	7.5	7.5	7.5	-	8.6	8.6	8.5	-	9.8	9.8	9.7	-	11.1	11.1	11.0	-	12.5	12.5	12.5	-	14.2	14.2	14.2	-
		HI PR	257	258	259	-	296	298	299	-	338	339	341	-	383	384	386	-	432	433	435	-	484	485	486	-
		LO PR	123	125	128	-	130	132	135	-	137	138	141	-	142	144	147	-	147	149	152	-	154	156	159	-
	1350	MBh	36.1	36.6	37.6	-	35.8	36.3	37.3	-	34.9	35.4	36.4	-	33.4	33.8	34.9	-	31.5	31.9	33.0	-	29.7	30.2	31.2	-
		S/T	0.71	0.63	0.50	-	0.71	0.64	0.50	-	0.74	0.66	0.53	-	1.00	0.68	0.55	-	1.00	0.71	0.57	-	1.00	0.76	0.62	-
		ΔT	18	16	12	-	18	16	12	-	18	16	13	-	18	16	12	-	18	16	12	-	19	17	13	-
		KW	2.05	2.04	2.04	-	2.28	2.28	2.28	-	2.55	2.54	2.54	-	2.83	2.83	2.83	-	3.15	3.15	3.14	-	3.52	3.52	3.52	-
		Amps	7.5	7.5	7.5	-	8.6	8.6	8.6	-	9.8	9.8	9.8	-	11.1	11.1	11.1	-	12.6	12.6	12.6	-	14.3	14.3	14.3	-
		HI PR	259	260	262	-	299	300	302	-	341	342	343	-	386	387	388	-	434	435	437	-	486	487	489	-
		LO PR	125	127	130	-	133	134	137	-	139	141	144	-	145	146	149	-	150	151	154	-	156	158	161	-
75	1100	MBh	35.1	35.6	36.6	38.2	34.8	35.2	36.3	37.9	33.9	34.3	35.4	37.0	32.3	**32.8**	33.8	35.4	30.4	30.9	31.9	33.5	28.7	29.2	30.2	31.8
		S/T	0.79	0.72	0.58	0.44	0.80	0.72	0.59	0.45	1.00	0.75	0.61	0.47	1.00	**0.77**	0.63	0.49	1.00	0.79	0.65	0.51	1.00	0.84	0.71	0.56
		ΔT	24	22	18	15	24	22	18	15	24	22	18	15	24	**22**	18	14	23	22	18	14	25	23	19	15
		KW	2.03	2.02	2.02	2.04	2.26	2.26	2.26	2.28	2.53	2.52	2.52	2.54	2.81	**2.81**	2.81	2.82	3.13	3.13	3.12	3.14	3.50	3.50	3.50	3.52
		Amps	7.4	7.4	7.4	7.5	8.5	8.5	8.5	8.6	9.7	9.7	9.7	9.8	11.0	**11.0**	11.0	11.1	12.5	12.5	12.5	12.5	14.2	14.2	14.2	14.3
		HI PR	255	256	258	263	295	296	298	302	337	338	340	344	382	**383**	385	389	430	432	433	438	482	483	485	490
		LO PR	122	123	126	131	129	130	134	139	135	137	140	145	141	**142**	145	150	146	148	151	156	153	154	157	162
	1200	MBh	35.5	35.9	37.0	38.6	35.1	35.6	36.7	38.2	34.2	34.7	35.8	37.3	32.7	**33.2**	34.2	35.8	30.8	31.3	32.3	33.9	29.1	29.5	30.6	32.2
		S/T	0.82	0.74	0.61	0.47	0.83	0.75	0.61	0.47	1.00	0.77	0.64	0.50	1.00	**0.79**	0.66	0.52	1.00	0.82	0.68	0.54	1.00	1.00	0.73	0.59
		ΔT	23	21	18	14	23	21	17	14	23	21	18	14	23	**21**	17	14	23	21	17	14	24	22	18	15
		KW	2.03	2.03	2.03	2.05	2.27	2.27	2.26	2.28	2.53	2.53	2.53	2.55	2.82	**2.82**	2.81	2.83	3.14	3.14	3.13	3.15	3.51	3.51	3.51	3.52
		Amps	7.5	7.5	7.4	7.5	8.6	8.5	8.5	8.6	9.8	9.8	9.7	9.8	11.1	**11.1**	11.0	11.1	12.5	12.5	12.5	12.6	14.2	14.2	14.2	14.3
		HI PR	257	258	260	264	297	298	300	304	338	340	341	346	383	**385**	386	391	432	433	435	439	484	485	487	491
		LO PR	123	125	128	133	130	132	135	140	137	138	141	146	142	**144**	147	152	147	149	152	157	154	156	159	164
	1350	MBh	36.1	36.6	37.7	39.2	35.8	36.3	37.4	38.9	34.9	35.4	36.4	38.0	33.4	**33.9**	34.9	36.5	31.5	32.0	33.0	34.6	29.7	30.2	31.3	32.8
		S/T	0.84	0.76	0.63	0.48	0.84	0.77	0.63	0.49	1.00	0.79	0.66	0.51	1.00	**0.81**	0.68	0.53	1.00	0.83	0.70	0.56	1.00	1.00	0.75	0.61
		ΔT	22	20	17	13	22	20	17	13	22	20	17	13	22	**20**	17	13	22	20	16	13	23	21	17	14
		KW	2.04	2.04	2.04	2.06	2.28	2.28	2.27	2.29	2.54	2.54	2.54	2.56	2.83	**2.83**	2.82	2.84	3.15	3.15	3.14	3.16	3.52	3.52	3.52	3.53
		Amps	7.5	7.5	7.5	7.6	8.6	8.6	8.6	8.7	9.8	9.8	9.8	9.9	11.1	**11.1**	11.1	11.2	12.6	12.6	12.5	12.6	14.3	14.3	14.3	14.3
		HI PR	259	260	262	266	299	300	302	306	341	342	344	348	386	**387**	389	393	434	435	437	442	486	487	489	493
		LO PR	125	127	130	135	133	134	137	142	139	141	144	149	145	**146**	149	154	150	151	154	159	156	158	161	166

IDB: Entering Indoor Dry Bulb Temperature

Shaded area reflects ACCA (TVA) conditions

kW = Total system power

High and low pressures are measured at the liquid and suction service valves.

Amps = outdoor unit amps (comp.+fan)

Expanded Cooling Data — GSX140371** + CA*F3137*6** + EEP (cont.)

			Outdoor Ambient Temperature																							
			65				75				85				95				105				115			
			Entering Indoor Wet Bulb Temperature																							
IDB	Airflow		59	63	67	71	59	63	67	71	59	63	67	71	59	63	67	71	59	63	67	71	59	63	67	71
80	1100	MBh	35.2	35.7	36.8	38.3	34.9	35.4	36.5	38.0	34.0	34.5	35.6	37.1	32.5	33.0	**34.0**	35.6	30.6	31.1	32.1	33.7	28.8	29.3	30.4	31.9
		S/T	0.92	0.84	0.71	0.6	1.00	0.85	0.71	0.57	1.00	0.87	0.74	0.6	1.00	0.89	**0.76**	0.61	1.00	1.00	0.78	0.6	1.00	1.00	0.83	0.69
		ΔT	28	26	23	19	28	26	22	19	28	26	23	19	28	26	**22**	19	28	26	22	18	29	27	23	20
		KW	2.03	2.03	2.02	2.0	2.26	2.26	2.26	2.28	2.53	2.53	2.52	2.5	2.81	2.81	**2.81**	2.83	3.13	3.13	3.13	3.1	3.51	3.50	3.50	3.52
		Amps	7.4	7.4	7.4	7.5	8.5	8.5	8.5	8.6	9.7	9.7	9.7	9.8	11.0	11.0	**11.0**	11.1	12.5	12.5	12.5	12.6	14.2	14.2	14.2	14.3
		HI PR	256	257	259	263	296	297	298	303	337	339	340	345	382	384	**385**	390	431	432	434	438	483	484	486	490
		LO PR	122	124	127	132	130	131	134	139	136	137	140	146	141	143	**146**	151	147	148	151	156	153	155	158	163
	1200	MBh	35.6	36.1	37.2	38.7	35.3	35.8	36.8	38.4	34.4	34.9	35.9	37.5	32.9	33.4	34.4	36.0	31.0	31.5	32.5	34.1	29.2	29.7	30.8	32.3
		S/T	1.00	0.87	0.73	0.6	1.00	0.87	0.74	0.60	1.00	0.90	0.76	0.6	1.00	0.92	0.78	0.64	1.00	1.00	0.81	0.7	1.00	1.00	0.86	0.72
		ΔT	27	25	22	18	27	25	22	18	27	26	22	18	27	25	22	18	27	25	21	18	28	26	23	19
		KW	2.04	2.03	2.03	2.1	2.27	2.27	2.27	2.28	2.54	2.53	2.53	2.6	2.82	2.82	2.81	2.83	3.14	3.14	3.13	3.2	3.51	3.51	3.51	3.53
		Amps	7.5	7.5	7.5	7.5	8.6	8.6	8.5	8.6	9.8	9.8	9.7	9.8	11.1	11.1	11.0	11.1	12.5	12.5	12.5	12.6	14.2	14.2	14.2	14.3
		HI PR	257	258	260	265	297	298	300	304	339	340	342	346	384	385	387	391	432	434	435	440	484	485	487	492
		LO PR	124	125	128	133	131	132	135	141	137	139	142	147	143	144	147	152	148	150	153	158	155	156	159	164
	1350	MBh	36.3	36.8	37.8	39.4	36.0	36.5	37.5	39.1	35.1	35.6	36.6	38.2	33.6	34.0	35.1	36.7	31.7	32.1	33.2	34.8	29.9	30.4	31.4	33.0
		S/T	1.00	0.89	0.75	0.6	1.00	0.89	0.76	0.61	1.00	0.92	0.78	0.6	1.00	1.00	0.80	0.66	1.00	1.00	0.82	0.7	1.00	1.00	0.88	0.73
		ΔT	26	24	21	17	26	24	21	17	27	25	21	17	26	24	21	17	26	24	20	17	27	25	22	18
		KW	2.05	2.04	2.04	2.1	2.28	2.28	2.28	2.29	2.55	2.54	2.54	2.6	2.83	2.83	2.83	2.84	3.15	3.15	3.14	3.2	3.52	3.52	3.52	3.54
		Amps	7.5	7.5	7.5	7.6	8.6	8.6	8.6	8.7	9.8	9.8	9.8	9.9	11.1	11.1	11.1	11.2	12.6	12.6	12.6	12.6	14.3	14.3	14.3	14.3
		HI PR	260	261	262	267	299	301	302	307	341	342	344	349	386	387	389	394	435	436	438	442	487	488	489	494
		LO PR	126	127	131	136	133	135	138	143	140	141	144	149	145	147	150	155	150	152	155	160	157	159	162	167
85	1100	MBh	35.8	36.3	37.3	38.9	35.5	36.0	37.0	38.6	34.6	35.1	36.1	37.7	33.1	33.5	34.6	36.2	31.2	31.7	32.7	34.3	29.4	29.9	30.9	32.5
		S/T	1.00	0.94	0.81	0.67	1.00	0.95	0.81	0.67	1.00	1.00	0.84	0.70	1.00	1.00	0.86	0.72	1.00	1.00	0.88	0.74	1.00	1.00	1.00	0.79
		ΔT	32	30	26	23	32	30	26	23	32	30	26	23	32	30	26	22	31	30	26	22	33	31	27	23
		KW	2.03	2.03	2.03	2.04	2.27	2.27	2.26	2.28	2.53	2.53	2.53	2.54	2.82	2.82	2.81	2.83	3.14	3.13	3.13	3.15	3.51	3.51	3.50	3.52
		Amps	7.5	7.5	7.4	7.5	8.5	8.5	8.5	8.6	9.8	9.7	9.7	9.8	11.1	11.1	11.0	11.1	12.5	12.5	12.5	12.6	14.2	14.2	14.2	14.3
		HI PR	257	258	260	264	297	298	300	304	339	340	341	346	384	385	386	391	432	433	435	439	484	485	487	491
		LO PR	124	126	129	134	131	133	136	141	138	139	142	147	143	145	148	153	148	150	153	158	155	157	160	165
	1200	MBh	36.2	36.7	37.7	39.3	35.9	36.4	37.4	39.0	35.0	35.5	36.5	38.1	33.4	33.9	35.0	36.5	31.5	32.0	33.1	34.6	29.8	30.3	31.3	32.9
		S/T	1.00	0.97	0.83	0.69	1.00	0.98	0.84	0.70	1.00	1.00	0.87	0.72	1.00	1.00	0.89	0.74	1.00	1.00	0.91	0.76	1.00	1.00	1.00	0.82
		ΔT	31	29	26	22	31	29	25	22	31	29	26	22	31	29	25	22	31	29	25	22	32	30	26	23
		KW	2.04	2.04	2.03	2.05	2.28	2.27	2.27	2.29	2.54	2.54	2.53	2.55	2.83	2.82	2.82	2.84	3.14	3.14	3.14	3.16	3.52	3.52	3.51	3.53
		Amps	7.5	7.5	7.5	7.6	8.6	8.6	8.6	8.6	9.8	9.8	9.8	9.8	11.1	11.1	11.1	11.2	12.6	12.5	12.5	12.6	14.3	14.3	14.2	14.3
		HI PR	258	260	261	266	298	299	301	306	340	341	343	347	385	386	388	392	434	435	437	441	485	487	488	493
		LO PR	125	127	130	135	133	134	137	142	139	141	144	149	145	146	149	154	150	151	154	159	156	158	161	166
	1350	MBh	36.9	37.4	38.4	40.0	36.6	37.1	38.1	39.7	35.7	36.2	37.2	38.8	34.1	34.6	35.7	37.2	32.2	32.7	33.8	35.3	30.5	31.0	32.0	33.6
		S/T	1.00	0.99	0.85	0.71	1.00	1.00	0.86	0.72	1.00	1.00	0.88	0.74	1.00	1.00	0.90	0.76	1.00	1.00	0.92	0.78	1.00	1.00	1.00	0.83
		ΔT	30	28	25	21	30	28	25	21	30	28	25	21	30	28	25	21	30	28	24	21	31	29	25	22
		KW	2.05	2.05	2.04	2.06	2.29	2.28	2.28	2.30	2.55	2.55	2.54	2.56	2.84	2.83	2.83	2.85	3.15	3.15	3.15	3.17	3.53	3.53	3.52	3.54
		Amps	7.5	7.5	7.5	7.6	8.6	8.6	8.6	8.7	9.8	9.8	9.8	9.9	11.1	11.1	11.1	11.2	12.6	12.6	12.6	12.7	14.3	14.3	14.3	14.4
		HI PR	261	262	264	268	301	302	304	308	342	344	345	350	387	389	390	395	436	437	439	443	488	489	491	495
		LO PR	128	129	132	137	135	137	140	145	141	143	146	151	147	148	151	157	152	154	157	162	159	160	163	168

IDB: Entering Indoor Dry Bulb Temperature

Shaded area reflects AHRI conditions

kW = Total system power

High and low pressures are measured at the liquid and suction service valves.

Amps = outdoor unit amps (comp.+fan)

Expanded Cooling Data — GSX140421** + CA*F4961*6** + EEP

			Outdoor Ambient Temperature																							
			65				75				85				95				105				115			
			Entering Indoor Wet Bulb Temperature																							
IDB	Airflow		59	63	67	71	59	63	67	71	59	63	67	71	59	63	67	71	59	63	67	71	59	63	67	71
70	1225	MBh	39.7	40.2	41.4	-	39.3	39.9	41.1	-	38.3	38.8	40.0	-	36.5	37.1	38.2	-	34.3	34.9	36.1	-	32.3	32.9	34.1	-
		S/T	0.63	0.55	0.41	-	0.64	0.56	0.42	-	0.66	0.58	0.44	-	1.00	0.60	0.46	-	1.00	0.63	0.49	-	1.00	0.68	0.54	-
		ΔT	20	18	15	-	20	18	15	-	20	18	15	-	20	18	15	-	20	18	14	-	21	19	15	-
		KW	2.32	2.32	2.31	-	2.59	2.59	2.58	-	2.89	2.89	2.88	-	3.21	3.21	3.21	-	3.58	3.57	3.57	-	4.00	4.00	4.00	-
		Amps	8.3	8.3	8.3	-	9.5	9.5	9.5	-	10.9	10.9	10.9	-	12.4	12.4	12.3	-	14.0	14.0	14.0	-	16.0	16.0	16.0	-
		HI PR	264	266	267	-	306	307	309	-	350	351	353	-	397	398	400	-	448	449	451	-	502	503	505	-
		LO PR	126	128	131	-	134	135	139	-	140	142	145	-	146	148	151	-	152	153	157	-	159	160	163	-
	1400	MBh	40.2	40.8	41.9	-	39.8	40.4	41.6	-	38.8	39.4	40.6	-	37.0	37.6	38.8	-	34.8	35.4	36.6	-	32.9	33.4	34.6	-
		S/T	0.69	0.61	0.47	-	0.70	0.62	0.48	-	0.73	0.65	0.51	-	1.00	0.67	0.53	-	1.00	0.69	0.55	-	1.00	0.74	0.60	-
		ΔT	19	17	13	-	19	17	13	-	19	17	14	-	19	17	13	-	18	17	13	-	20	18	14	-
		KW	2.34	2.33	2.33	-	2.60	2.60	2.60	-	2.90	2.90	2.90	-	3.23	3.23	3.22	-	3.59	3.59	3.58	-	4.02	4.01	4.01	-
		Amps	8.4	8.3	8.3	-	9.6	9.6	9.6	-	11.0	10.9	10.9	-	12.4	12.4	12.4	-	14.1	14.1	14.1	-	16.0	16.0	16.0	-
		HI PR	267	268	270	-	308	309	311	-	352	353	355	-	399	400	402	-	450	451	453	-	504	505	507	-
		LO PR	128	130	133	-	136	137	140	-	142	144	147	-	148	150	153	-	154	155	158	-	161	162	165	-
	1575	MBh	40.8	41.4	42.6	-	40.5	41.0	42.2	-	39.4	40.0	41.2	-	37.7	38.2	39.4	-	35.5	36.0	37.2	-	33.5	34.0	35.2	-
		S/T	0.73	0.65	0.51	-	0.74	0.66	0.52	-	1.00	0.68	0.54	-	1.00	0.70	0.56	-	1.00	0.73	0.58	-	1.00	1.00	0.64	-
		ΔT	18	16	13	-	18	16	12	-	18	16	13	-	18	16	12	-	17	16	12	-	19	17	13	-
		KW	2.35	2.34	2.34	-	2.62	2.61	2.61	-	2.92	2.91	2.91	-	3.24	3.24	3.23	-	3.60	3.60	3.60	-	4.03	4.03	4.02	-
		Amps	8.4	8.4	8.4	-	9.6	9.6	9.6	-	11.0	11.0	11.0	-	12.5	12.5	12.5	-	14.2	14.1	14.1	-	16.1	16.1	16.1	-
		HI PR	269	270	272	-	311	312	314	-	354	355	357	-	401	402	404	-	452	453	455	-	506	507	509	-
		LO PR	130	132	135	-	138	139	142	-	144	146	149	-	150	152	155	-	156	157	160	-	163	164	167	-
75	1225	MBh	39.7	40.3	41.4	43.3	39.3	39.9	41.1	42.9	38.3	38.9	40.1	41.9	36.5	**37.1**	38.3	40.1	34.3	34.9	36.1	37.9	32.4	32.9	34.1	35.9
		S/T	0.77	0.69	0.55	0.40	1.00	0.69	0.55	0.40	1.00	0.72	0.58	0.43	1.00	**0.74**	0.60	0.45	1.00	0.76	0.62	0.47	1.00	1.00	0.67	0.53
		ΔT	24	22	19	15	24	22	19	15	24	22	19	15	24	**22**	19	15	24	22	18	15	25	23	19	16
		KW	2.32	2.32	2.31	2.33	2.59	2.59	2.58	2.60	2.89	2.89	2.88	2.90	3.21	**3.21**	3.21	3.23	3.58	3.57	3.57	3.59	4.00	4.00	3.99	4.01
		Amps	8.3	8.3	8.3	8.0	9.5	9.5	9.5	9.6	10.9	10.9	10.9	11.0	12.4	**12.4**	12.3	12.4	14.0	14.0	14.0	14.0	16.0	16.0	15.9	16.0
		HI PR	265	266	268	272	306	307	309	314	350	351	353	358	397	**398**	400	405	448	449	451	455	502	503	505	510
		LO PR	126	128	131	136	134	135	139	144	141	142	145	151	146	**148**	151	156	152	153	157	162	159	160	164	169
	1400	MBh	40.2	40.8	42.0	43.8	39.9	40.4	41.6	43.4	38.8	39.4	40.6	42.4	37.0	**37.6**	38.8	40.6	34.9	35.4	36.6	38.4	32.9	33.4	34.6	36.4
		S/T	0.83	0.75	0.61	0.46	1.00	0.76	0.61	0.47	1.00	0.78	0.64	0.49	1.00	**0.80**	0.66	0.51	1.00	1.00	0.68	0.53	1.00	1.00	0.74	0.59
		ΔT	23	21	17	14	23	21	17	14	23	21	18	14	23	**21**	17	14	22	21	17	14	24	22	18	15
		KW	2.33	2.33	2.33	2.35	2.60	2.60	2.60	2.62	2.90	2.90	2.90	2.92	3.23	**3.22**	3.22	3.24	3.59	3.59	3.58	3.60	4.01	4.01	4.01	4.03
		Amps	8.3	8.3	8.3	8.0	9.6	9.6	9.5	10.0	10.9	10.9	10.9	11.0	12.4	**12.4**	12.4	12.0	14.1	14.1	14.1	14.0	16.0	16.0	16.0	16.1
		HI PR	267	268	270	274	309	310	312	316	352	353	355	360	399	**400**	402	407	450	451	453	458	504	505	507	512
		LO PR	128	130	133	138	136	137	140	146	142	144	147	153	148	**150**	153	158	154	155	158	164	161	162	165	171
	1575	MBh	40.8	41.4	42.6	44.4	40.5	41.1	42.2	44.0	39.5	40.0	41.2	43.0	37.7	**38.2**	39.4	41.2	35.5	36.1	37.2	39.1	33.5	34.1	35.3	37.1
		S/T	0.86	0.78	0.64	0.49	1.00	0.79	0.65	0.50	1.00	0.82	0.68	0.53	1.00	**0.84**	0.70	0.55	1.00	1.00	0.72	0.57	1.00	1.00	0.77	0.62
		ΔT	22	20	17	13	22	20	17	13	22	20	17	13	22	**20**	16	13	21	20	16	13	23	21	17	14
		KW	2.35	2.34	2.34	2.36	2.61	2.61	2.61	2.63	2.91	2.91	2.91	2.93	3.24	**3.24**	3.23	3.25	3.60	3.60	3.59	3.61	4.03	4.02	4.02	4.04
		Amps	8.4	8.4	8.4	8.0	9.6	9.6	9.6	10.0	11.0	11.0	11.0	11.0	12.5	**12.5**	12.5	13.0	14.1	14.1	14.1	14.0	16.1	16.1	16.1	16.2
		HI PR	269	270	272	277	311	312	314	318	354	356	357	362	402	**403**	405	409	452	453	455	460	506	508	509	514
		LO PR	130	132	135	140	138	139	142	148	144	146	149	155	150	**152**	155	160	156	157	160	166	163	164	167	173

IDB: Entering Indoor Dry Bulb Temperature

Shaded area reflects ACCA (TVA) conditions

kW = Total system power

High and low pressures are measured at the liquid and suction service valves.

Amps = outdoor unit amps (comp.+fan)

Expanded Cooling Data — GSX140421** + CA*F4961*6** + EEP (cont.)

			Outdoor Ambient Temperature																							
			65				75				85				95				105				115			
			Entering Indoor Wet Bulb Temperature																							
IDB	Airflow		59	63	67	71	59	63	67	71	59	63	67	71	59	63	67	71	59	63	67	71	59	63	67	71
80	1225	MBh	39.9	40.5	41.7	43.5	39.6	40.1	41.3	43.1	38.5	39.1	40.3	42.1	36.7	37.3	38.5	40.3	34.6	35.1	36.3	38.1	32.6	33.1	34.3	36.1
		S/T	1.00	0.82	0.68	0.5	1.00	0.82	0.68	0.53	1.00	0.85	0.71	0.6	1.00	1.00	0.73	0.58	1.00	1.00	0.75	0.6	1.00	1.00	0.81	0.66
		ΔT	28	26	23	19	28	26	23	19	28	26	23	19	28	26	23	19	28	26	22	19	29	27	23	20
		KW	2.32	2.32	2.31	2.3	2.59	2.59	2.58	2.60	2.89	2.89	2.88	2.9	3.21	3.21	3.21	3.23	3.58	3.57	3.57	3.6	4.00	4.00	4.00	4.02
		Amps	8.3	8.3	8.3	8.0	9.5	9.5	9.5	10.0	10.9	10.9	10.9	11.0	12.4	12.4	12.3	12.0	14.0	14.0	14.0	14.0	16.0	16.0	16.0	16.0
		HI PR	265	266	268	273	307	308	310	314	351	352	354	358	398	399	401	405	448	449	451	456	502	504	505	510
		LO PR	127	128	131	137	134	136	139	144	141	143	146	151	147	148	152	157	152	154	157	162	159	161	164	169
	1400	MBh	40.4	41.0	42.2	44.0	40.1	40.6	41.8	43.6	39.0	39.6	40.8	42.6	37.3	37.8	**39.0**	40.8	35.1	35.6	36.8	38.6	33.1	33.6	34.8	36.6
		S/T	1.00	0.88	0.74	0.6	1.00	0.89	0.74	0.60	1.00	0.91	0.77	0.6	1.00	1.00	**0.79**	0.64	1.00	1.00	0.81	0.7	1.00	1.00	0.87	0.72
		ΔT	27	25	22	18	27	25	21	18	27	25	22	18	27	25	**21**	18	26	25	21	18	28	26	22	19
		KW	2.33	2.33	2.33	2.4	2.60	2.60	2.60	2.62	2.90	2.90	2.90	2.9	3.23	3.23	**3.22**	3.24	3.59	3.59	3.58	3.6	4.02	4.01	4.01	4.03
		Amps	8.4	8.3	8.3	8.0	9.6	9.6	9.6	10.0	11.0	10.9	10.9	11.0	12.4	12.4	**12.4**	12.0	14.1	14.1	14.1	14.0	16.0	16.0	16.0	16.1
		HI PR	267	268	270	275	309	310	312	317	353	354	356	360	400	401	**403**	407	451	452	454	458	505	506	508	512
		LO PR	129	130	133	139	136	138	141	146	143	144	148	153	149	150	**153**	159	154	156	159	164	161	163	166	171
	1575	MBh	41.1	41.6	42.8	44.6	40.7	41.3	42.4	44.3	39.7	40.2	41.4	43.2	37.9	38.4	39.6	41.4	35.7	36.3	37.4	39.3	33.7	34.3	35.5	37.3
		S/T	1.00	0.91	0.77	0.6	1.00	0.92	0.78	0.63	1.00	1.00	0.81	0.7	1.00	1.00	0.83	0.68	1.00	1.00	0.85	0.7	1.00	1.00	1.00	0.75
		ΔT	26	24	21	17	26	24	21	17	26	24	21	17	26	24	21	17	26	24	20	17	27	25	21	18
		KW	2.35	2.34	2.34	2.4	2.62	2.61	2.61	2.63	2.92	2.91	2.91	2.9	3.24	3.24	3.23	3.25	3.60	3.60	3.60	3.6	4.03	4.03	4.02	4.00
		Amps	8.4	8.4	8.4	8.0	9.6	9.6	9.6	10.0	11.0	11.0	11.0	11.0	12.5	12.5	12.5	13.0	14.2	14.1	14.1	14.0	16.1	16.1	16.1	16.2
		HI PR	270	271	273	277	311	312	314	319	355	356	358	363	402	403	405	410	453	454	456	460	507	508	510	514
		LO PR	131	132	135	141	138	140	143	148	145	147	150	155	151	152	155	161	156	158	161	166	163	165	168	173
85	1225	MBh	40.6	41.1	42.3	44.1	40.2	40.8	42.0	43.8	39.2	39.7	40.9	42.7	37.4	38.0	39.1	41.0	35.2	35.8	37.0	38.8	33.2	33.8	35.0	36.8
		S/T	1.00	0.92	0.78	0.63	1.00	1.00	0.79	0.64	1.00	1.00	0.81	0.67	1.00	1.00	0.83	0.69	1.00	1.00	1.00	0.71	1.00	1.00	1.00	0.76
		ΔT	31	30	26	23	31	30	26	23	32	30	26	23	31	30	26	23	31	29	26	22	32	30	27	24
		KW	2.33	2.32	2.32	2.34	2.59	2.59	2.59	2.61	2.89	2.89	2.89	2.91	3.22	3.22	3.21	3.23	3.58	3.58	3.58	3.60	4.01	4.01	4.00	4.02
		Amps	8.3	8.3	8.3	8.0	9.5	9.5	9.5	10.0	10.9	10.9	10.9	11.0	12.4	12.4	12.4	12.0	14.1	14.0	14.0	14.0	16.0	16.0	16.0	16.1
		HI PR	266	267	269	274	308	309	311	316	352	353	355	359	399	400	402	406	450	451	453	457	504	505	507	511
		LO PR	129	130	133	139	136	138	141	146	143	145	148	153	149	150	153	159	154	156	159	164	161	163	166	171
	1400	MBh	41.1	41.7	42.8	44.7	40.7	41.3	42.5	44.3	39.7	40.3	41.5	43.3	37.9	38.5	39.7	41.5	35.7	36.3	37.5	39.3	33.8	34.3	35.5	37.3
		S/T	1.00	0.99	0.84	0.69	1.00	1.00	0.85	0.70	1.00	1.00	0.88	0.73	1.00	1.00	0.90	0.75	1.00	1.00	1.00	0.77	1.00	1.00	1.00	0.82
		ΔT	30	29	25	22	30	28	25	22	31	29	25	22	30	28	25	22	30	28	25	21	31	29	26	22
		KW	2.34	2.34	2.33	2.35	2.61	2.61	2.60	2.62	2.91	2.91	2.90	2.92	3.23	3.23	3.23	3.25	3.60	3.59	3.59	3.61	4.02	4.02	4.01	4.04
		Amps	8.4	8.4	8.3	8.0	9.6	9.6	9.6	10.0	11.0	11.0	10.9	11.0	12.5	12.5	12.4	13.0	14.1	14.1	14.1	14.0	16.1	16.1	16.0	16.1
		HI PR	269	270	272	276	310	311	313	318	354	355	357	362	401	402	404	409	452	453	455	459	506	507	509	514
		LO PR	130	132	135	141	138	140	143	148	145	146	150	155	150	152	155	161	156	158	161	166	163	165	168	173
	1575	MBh	41.7	42.3	43.5	45.3	41.4	41.9	43.1	44.9	40.3	40.9	42.1	43.9	38.5	39.1	40.3	42.1	36.4	36.9	38.1	39.9	34.4	34.9	36.1	37.9
		S/T	1.00	1.00	0.88	0.73	1.00	1.00	0.89	0.74	1.00	1.00	0.91	0.76	1.00	1.00	0.93	0.78	1.00	1.00	1.00	0.81	1.00	1.00	1.00	0.86
		ΔT	29	28	24	21	29	28	24	21	30	28	24	21	29	28	24	21	29	27	24	20	30	28	25	21
		KW	2.35	2.35	2.34	2.37	2.62	2.62	2.61	2.63	2.92	2.92	2.91	2.93	3.24	3.24	3.24	3.26	3.61	3.61	3.60	3.62	4.03	4.03	4.03	4.05
		Amps	8.4	8.4	8.4	8.0	9.7	9.6	9.6	10.0	11.0	11.0	11.0	11.0	12.5	12.5	12.5	13.0	14.2	14.2	14.1	14.0	16.1	16.1	16.1	16.2
		HI PR	271	272	274	278	312	314	315	320	356	357	359	364	403	404	406	411	454	455	457	462	508	509	511	516
		LO PR	132	134	137	143	140	142	145	150	147	148	152	157	153	154	157	163	158	160	163	168	165	167	170	175

IDB: Entering Indoor Dry Bulb Temperature

Shaded area reflects AHRI conditions

kW = Total system power

High and low pressures are measured at the liquid and suction service valves.

Amps = outdoor unit amps (comp.+fan)

Expanded Cooling Data — GSX140431** + CA*F4961*6** + EEP

			Outdoor Ambient Temperature																							
			65				75				85				95				105				115			
			Entering Indoor Wet Bulb Temperature																							
IDB	Airflow		59	63	67	71	59	63	67	71	59	63	67	71	59	63	67	71	59	63	67	71	59	63	67	71
70	1225	MBh	39.7	40.2	41.4	-	39.3	39.9	41.1	-	38.3	38.8	40.0	-	36.5	37.1	38.2	-	34.3	34.9	36.1	-	32.3	32.9	34.1	-
		S/T	0.63	0.55	0.41	-	0.64	0.56	0.42	-	0.66	0.58	0.44	-	1.00	0.60	0.46	-	1.00	0.63	0.49	-	1.00	0.68	0.54	-
		ΔT	20	18	15	-	20	18	15	-	20	18	15	-	20	18	15	-	20	18	14	-	21	19	15	-
		KW	2.32	2.32	2.31	-	2.59	2.59	2.58	-	2.89	2.89	2.88	-	3.21	3.21	3.21	-	3.58	3.57	3.57	-	4.00	4.00	4.00	-
		Amps	8.3	8.3	8.3	-	9.5	9.5	9.5	-	10.9	10.9	10.9	-	12.4	12.4	12.3	-	14.0	14.0	14.0	-	16.0	16.0	16.0	-
		HI PR	264	266	267	-	306	307	309	-	350	351	353	-	397	398	400	-	448	449	451	-	502	503	505	-
		LO PR	126	128	131	-	134	135	139	-	140	142	145	-	146	148	151	-	152	153	157	-	159	160	163	-
	1400	MBh	40.2	40.8	41.9	-	39.8	40.4	41.6	-	38.8	39.4	40.6	-	37.0	37.6	38.8	-	34.8	35.4	36.6	-	32.9	33.4	34.6	-
		S/T	0.69	0.61	0.47	-	0.70	0.62	0.48	-	0.73	0.65	0.51	-	1.00	0.67	0.53	-	1.00	0.69	0.55	-	1.00	0.74	0.60	-
		ΔT	19	17	13	-	19	17	13	-	19	17	14	-	19	17	13	-	18	17	13	-	20	18	14	-
		KW	2.34	2.33	2.33	-	2.60	2.60	2.60	-	2.90	2.90	2.90	-	3.23	3.23	3.22	-	3.59	3.59	3.58	-	4.02	4.01	4.01	-
		Amps	8.4	8.3	8.3	-	9.6	9.6	9.6	-	11.0	10.9	10.9	-	12.4	12.4	12.4	-	14.1	14.1	14.1	-	16.0	16.0	16.0	-
		HI PR	267	268	270	-	308	309	311	-	352	353	355	-	399	400	402	-	450	451	453	-	504	505	507	-
		LO PR	128	130	133	-	136	137	140	-	142	144	147	-	148	150	153	-	154	155	158	-	161	162	165	-
	1575	MBh	40.8	41.4	42.6	-	40.5	41.0	42.2	-	39.4	40.0	41.2	-	37.7	38.2	39.4	-	35.5	36.0	37.2	-	33.5	34.0	35.2	-
		S/T	0.73	0.65	0.51	-	0.74	0.66	0.52	-	1.00	0.68	0.54	-	1.00	0.70	0.56	-	1.00	0.73	0.58	-	1.00	1.00	0.64	-
		ΔT	18	16	13	-	18	16	12	-	18	16	13	-	18	16	12	-	17	16	12	-	19	17	13	-
		KW	2.35	2.34	2.34	-	2.62	2.61	2.61	-	2.92	2.91	2.91	-	3.24	3.24	3.23	-	3.60	3.60	3.60	-	4.03	4.03	4.02	-
		Amps	8.4	8.4	8.4	-	9.6	9.6	9.6	-	11.0	11.0	11.0	-	12.5	12.5	12.5	-	14.2	14.1	14.1	-	16.1	16.1	16.1	-
		HI PR	269	270	272	-	311	312	314	-	354	355	357	-	401	402	404	-	452	453	455	-	506	507	509	-
		LO PR	130	132	135	-	138	139	142	-	144	146	149	-	150	152	155	-	156	157	160	-	163	164	167	-
75	1225	MBh	39.7	40.3	41.4	43.3	39.3	39.9	41.1	42.9	38.3	38.9	40.1	41.9	36.5	37.1	38.3	40.1	34.3	34.9	36.1	37.9	32.4	32.9	34.1	35.9
		S/T	0.77	0.69	0.55	0.40	1.00	0.69	0.55	0.40	1.00	0.72	0.58	0.43	1.00	0.74	0.60	0.45	1.00	0.76	0.62	0.47	1.00	1.00	0.67	0.53
		ΔT	24	22	19	15	24	22	19	15	24	22	19	15	24	22	19	15	24	22	18	15	25	23	19	16
		KW	2.32	2.32	2.31	2.33	2.59	2.59	2.58	2.60	2.89	2.89	2.88	2.90	3.21	3.21	3.21	3.23	3.58	3.57	3.57	3.59	4.00	4.00	3.99	4.01
		Amps	8.3	8.3	8.3	8.0	9.5	9.5	9.5	9.6	10.9	10.9	10.9	11.0	12.4	12.4	12.3	12.4	14.0	14.0	14.0	14.0	16.0	16.0	15.9	16.0
		HI PR	265	266	268	272	306	307	309	314	350	351	353	358	397	398	400	405	448	449	451	455	502	503	505	510
		LO PR	126	128	131	136	134	135	139	144	141	142	145	151	146	148	151	156	152	153	157	162	159	160	164	169
	1400	MBh	40.2	40.8	42.0	43.8	39.9	40.4	41.6	43.4	38.8	39.4	40.6	42.4	37.0	**37.6**	38.8	40.6	34.9	35.4	36.6	38.4	32.9	33.4	34.6	36.4
		S/T	0.83	0.75	0.61	0.46	1.00	0.76	0.61	0.47	1.00	0.78	0.64	0.49	1.00	**0.80**	0.66	0.51	1.00	1.00	0.68	0.53	1.00	1.00	0.74	0.59
		ΔT	23	21	17	14	23	21	17	14	23	21	18	14	23	**21**	17	14	22	21	17	14	24	22	18	15
		KW	2.33	2.33	2.33	2.35	2.60	2.60	2.60	2.62	2.90	2.90	2.90	2.92	3.23	**3.22**	3.22	3.24	3.59	3.59	3.58	3.60	4.01	4.01	4.01	4.03
		Amps	8.3	8.3	8.3	8.0	9.6	9.6	9.5	10.0	10.9	10.9	10.9	11.0	12.4	**12.4**	12.4	12.0	14.1	14.1	14.1	14.0	16.0	16.0	16.0	16.1
		HI PR	267	268	270	274	309	310	312	316	352	353	355	360	399	**400**	402	407	450	451	453	458	504	505	507	512
		LO PR	128	130	133	138	136	137	140	146	142	144	147	153	148	**150**	153	158	154	155	158	164	161	162	165	171
	1575	MBh	40.8	41.4	42.6	44.4	40.5	41.1	42.2	44.0	39.5	40.0	41.2	43.0	37.7	38.2	39.4	41.2	35.5	36.1	37.2	39.1	33.5	34.1	35.3	37.1
		S/T	0.86	0.78	0.64	0.49	1.00	0.79	0.65	0.50	1.00	0.82	0.68	0.53	1.00	0.84	0.70	0.55	1.00	1.00	0.72	0.57	1.00	1.00	0.77	0.62
		ΔT	22	20	17	13	22	20	17	13	22	20	17	13	22	20	16	13	21	20	16	13	23	21	17	14
		KW	2.35	2.34	2.34	2.36	2.61	2.61	2.61	2.63	2.91	2.91	2.91	2.93	3.24	3.24	3.23	3.25	3.60	3.60	3.59	3.61	4.03	4.02	4.02	4.04
		Amps	8.4	8.4	8.4	8.0	9.6	9.6	9.6	10.0	11.0	11.0	11.0	11.0	12.5	12.5	12.5	13.0	14.1	14.1	14.1	14.0	16.1	16.1	16.1	16.2
		HI PR	269	270	272	277	311	312	314	318	354	356	357	362	402	403	405	409	452	453	455	460	506	508	509	514
		LO PR	130	132	135	140	138	139	142	148	144	146	149	155	150	152	155	160	156	157	160	166	163	164	167	173

IDB: Entering Indoor Dry Bulb Temperature

Shaded area reflects ACCA (TVA) conditions

kW = Total system power

High and low pressures are measured at the liquid and suction service valves.

Amps = outdoor unit amps (comp.+fan)

Expanded Cooling Data — GSX140431** + CA*F4961*6** + EEP (cont.)

			Outdoor Ambient Temperature																							
			65				75				85				95				105				115			
			Entering Indoor Wet Bulb Temperature																							
IDB	Airflow		59	63	67	71	59	63	67	71	59	63	67	71	59	63	67	71	59	63	67	71	59	63	67	71
80	1225	MBh	39.9	40.5	41.7	43.5	39.6	40.1	41.3	43.1	38.5	39.1	40.3	42.1	36.7	37.3	38.5	40.3	34.6	35.1	36.3	38.1	32.6	33.1	34.3	36.1
		S/T	1.00	0.82	0.68	0.5	1.00	0.82	0.68	0.53	1.00	0.85	0.71	0.6	1.00	1.00	0.73	0.58	1.00	1.00	0.75	0.6	1.00	1.00	0.81	0.66
		ΔT	28	26	23	19	28	26	23	19	28	26	23	19	28	26	23	19	28	26	22	19	29	27	23	20
		KW	2.32	2.32	2.31	2.3	2.59	2.59	2.58	2.60	2.89	2.89	2.88	2.9	3.21	3.21	3.21	3.23	3.58	3.57	3.57	3.6	4.00	4.00	4.00	4.02
		Amps	8.3	8.3	8.3	8.0	9.5	9.5	9.5	10.0	10.9	10.9	10.9	11.0	12.4	12.4	12.3	12.0	14.0	14.0	14.0	14.0	16.0	16.0	16.0	16.0
		HI PR	265	266	268	273	307	308	310	314	351	352	354	358	398	399	401	405	448	449	451	456	502	504	505	510
		LO PR	127	128	131	137	134	136	139	144	141	143	146	151	147	148	152	157	152	154	157	162	159	161	164	169
	1400	MBh	40.4	41.0	42.2	44.0	40.1	40.6	41.8	43.6	39.0	39.6	40.8	42.6	37.3	37.8	**39.0**	40.8	35.1	35.6	36.8	38.6	33.1	33.6	34.8	36.6
		S/T	1.00	0.88	0.74	0.6	1.00	0.89	0.74	0.60	1.00	0.91	0.77	0.6	1.00	1.00	**0.79**	0.64	1.00	1.00	0.81	0.7	1.00	1.00	0.87	0.72
		ΔT	27	25	22	18	27	25	21	18	27	25	22	18	27	25	**21**	18	26	25	21	18	28	26	22	19
		KW	2.33	2.33	2.33	2.4	2.60	2.60	2.60	2.62	2.90	2.90	2.90	2.9	3.23	3.23	**3.22**	3.24	3.59	3.59	3.58	3.6	4.02	4.01	4.01	4.03
		Amps	8.4	8.3	8.3	8.0	9.6	9.6	9.6	10.0	11.0	10.9	10.9	11.0	12.4	12.4	**12.4**	12.0	14.1	14.1	14.1	14.0	16.0	16.0	16.0	16.1
		HI PR	267	268	270	275	309	310	312	317	353	354	356	360	400	401	**403**	407	451	452	454	458	505	506	508	512
		LO PR	129	130	133	139	136	138	141	146	143	144	148	153	149	150	**153**	159	154	156	159	164	161	163	166	171
	1575	MBh	41.1	41.6	42.8	44.6	40.7	41.3	42.4	44.3	39.7	40.2	41.4	43.2	37.9	38.4	39.6	41.4	35.7	36.3	37.4	39.3	33.7	34.3	35.5	37.3
		S/T	1.00	0.91	0.77	0.6	1.00	0.92	0.78	0.63	1.00	1.00	0.81	0.7	1.00	1.00	0.83	0.68	1.00	1.00	0.85	0.7	1.00	1.00	1.00	0.75
		ΔT	26	24	21	17	26	24	21	17	26	24	21	17	26	24	21	17	26	24	20	17	27	25	21	18
		KW	2.35	2.34	2.34	2.4	2.62	2.61	2.61	2.63	2.92	2.91	2.91	2.9	3.24	3.24	3.23	3.25	3.60	3.60	3.60	3.6	4.03	4.03	4.02	4.00
		Amps	8.4	8.4	8.4	8.0	9.6	9.6	9.6	10.0	11.0	11.0	11.0	11.0	12.5	12.5	12.5	13.0	14.2	14.1	14.1	14.0	16.1	16.1	16.1	16.2
		HI PR	270	271	273	277	311	312	314	319	355	356	358	363	402	403	405	410	453	454	456	460	507	508	510	514
		LO PR	131	132	135	141	138	140	143	148	145	147	150	155	151	152	155	161	156	158	161	166	163	165	168	173
85	1225	MBh	40.6	41.1	42.3	44.1	40.2	40.8	42.0	43.8	39.2	39.7	40.9	42.7	37.4	38.0	39.1	41.0	35.2	35.8	37.0	38.8	33.2	33.8	35.0	36.8
		S/T	1.00	0.92	0.78	0.63	1.00	1.00	0.79	0.64	1.00	1.00	0.81	0.67	1.00	1.00	0.83	0.69	1.00	1.00	1.00	0.71	1.00	1.00	1.00	0.76
		ΔT	31	30	26	23	31	30	26	23	32	30	26	23	31	30	26	23	31	29	26	22	32	30	27	24
		KW	2.33	2.32	2.32	2.34	2.59	2.59	2.59	2.61	2.89	2.89	2.89	2.91	3.22	3.22	3.21	3.23	3.58	3.58	3.58	3.60	4.01	4.01	4.00	4.02
		Amps	8.3	8.3	8.3	8.0	9.5	9.5	9.5	10.0	10.9	10.9	10.9	11.0	12.4	12.4	12.4	12.0	14.1	14.0	14.0	14.0	16.0	16.0	16.0	16.1
		HI PR	266	267	269	274	308	309	311	316	352	353	355	359	399	400	402	406	450	451	453	457	504	505	507	511
		LO PR	129	130	133	139	136	138	141	146	143	145	148	153	149	150	153	159	154	156	159	164	161	163	166	171
	1400	MBh	41.1	41.7	42.8	44.7	40.7	41.3	42.5	44.3	39.7	40.3	41.5	43.3	37.9	38.5	39.7	41.5	35.7	36.3	37.5	39.3	33.8	34.3	35.5	37.3
		S/T	1.00	0.99	0.84	0.69	1.00	1.00	0.85	0.70	1.00	1.00	0.88	0.73	1.00	1.00	0.90	0.75	1.00	1.00	1.00	0.77	1.00	1.00	1.00	0.82
		ΔT	30	29	25	22	30	28	25	22	31	29	25	22	30	28	25	22	30	28	25	21	31	29	26	22
		KW	2.34	2.34	2.33	2.35	2.61	2.61	2.60	2.62	2.91	2.91	2.90	2.92	3.23	3.23	3.23	3.25	3.60	3.59	3.59	3.61	4.02	4.02	4.01	4.04
		Amps	8.4	8.4	8.3	8.0	9.6	9.6	9.6	10.0	11.0	11.0	10.9	11.0	12.5	12.5	12.4	13.0	14.1	14.1	14.1	14.0	16.1	16.1	16.0	16.1
		HI PR	269	270	272	276	310	311	313	318	354	355	357	362	401	402	404	409	452	453	455	459	506	507	509	514
		LO PR	130	132	135	141	138	140	143	148	145	146	150	155	150	152	155	161	156	158	161	166	163	165	168	173
	1575	MBh	41.7	42.3	43.5	45.3	41.4	41.9	43.1	44.9	40.3	40.9	42.1	43.9	38.5	39.1	40.3	42.1	36.4	36.9	38.1	39.9	34.4	34.9	36.1	37.9
		S/T	1.00	1.00	0.88	0.73	1.00	1.00	0.89	0.74	1.00	1.00	0.91	0.76	1.00	1.00	0.93	0.78	1.00	1.00	1.00	0.81	1.00	1.00	1.00	0.86
		ΔT	29	28	24	21	29	28	24	21	30	28	24	21	29	28	24	21	29	27	24	20	30	28	25	21
		KW	2.35	2.35	2.34	2.37	2.62	2.62	2.61	2.63	2.92	2.92	2.91	2.93	3.24	3.24	3.24	3.26	3.61	3.61	3.60	3.62	4.03	4.03	4.03	4.05
		Amps	8.4	8.4	8.4	8.0	9.7	9.6	9.6	10.0	11.0	11.0	11.0	11.0	12.5	12.5	12.5	13.0	14.2	14.2	14.1	14.0	16.1	16.1	16.1	16.2
		HI PR	271	272	274	278	312	314	315	320	356	357	359	364	403	404	406	411	454	455	457	462	508	509	511	516
		LO PR	132	134	137	143	140	142	145	150	147	148	152	157	153	154	157	163	158	160	163	168	165	167	170	175

IDB: Entering Indoor Dry Bulb Temperature

Shaded area reflects AHRI conditions

kW = Total system power

High and low pressures are measured at the liquid and suction service valves.

Amps = outdoor unit amps (comp.+fan)

Expanded Cooling Data — GSX140481** + CA*F4860*6** + EEP

			Outdoor Ambient Temperature																							
			65				75				85				95				105				115			
			Entering Indoor Wet Bulb Temperature																							
IDB	Airflow		59	63	67	71	59	63	67	71	59	63	67	71	59	63	67	71	59	63	67	71	59	63	67	71
70	1400	MBh	46.4	47.1	48.5	-	46.0	46.7	48.0	-	44.8	45.4	46.8	-	42.7	43.4	44.8	-	40.2	40.8	42.2	-	37.9	38.5	39.9	-
		S/T	0.61	0.54	0.41	-	0.62	0.55	0.41	-	0.65	0.57	0.44	-	0.66	0.59	0.46	-	1.00	0.61	0.48	-	1.00	0.66	0.53	-
		ΔT	19	17	14	-	19	17	14	-	19	18	14	-	19	17	14	-	19	17	14	-	20	18	15	-
		KW	2.77	2.77	2.76	-	3.09	3.08	3.08	-	3.44	3.44	3.43	-	3.83	3.82	3.82	-	4.26	4.25	4.25	-	4.76	4.76	4.75	-
		Amps	10.1	10.1	10.0	-	11.5	11.5	11.5	-	13.2	13.2	13.1	-	14.9	14.9	14.9	-	16.9	16.9	16.9	-	19.2	19.2	19.2	-
		HI PR	257	259	260	-	298	299	301	-	341	342	343	-	386	387	389	-	436	437	438	-	488	489	491	-
		LO PR	123	125	128	-	131	132	136	-	137	139	142	-	143	145	148	-	148	150	153	-	155	157	160	-
	1550	MBh	46.9	47.6	48.9	-	46.5	47.1	48.5	-	45.3	45.9	47.3	-	43.2	43.9	45.2	-	40.7	41.3	42.7	-	38.3	39.0	40.4	-
		S/T	0.66	0.58	0.45	-	0.66	0.59	0.45	-	0.69	0.61	0.48	-	1.00	0.63	0.50	-	1.00	0.65	0.52	-	1.00	0.71	0.57	-
		ΔT	18	17	13	-	18	17	13	-	19	17	13	-	18	17	13	-	18	16	13	-	19	17	14	-
		KW	2.78	2.78	2.77	-	3.10	3.10	3.09	-	3.45	3.45	3.45	-	3.84	3.84	3.83	-	4.27	4.27	4.26	-	4.77	4.77	4.76	-
		Amps	10.1	10.1	10.1	-	11.6	11.6	11.6	-	13.2	13.2	13.2	-	15.0	15.0	14.9	-	16.9	16.9	16.9	-	19.3	19.2	19.2	-
		HI PR	259	260	262	-	300	301	303	-	342	343	345	-	388	389	391	-	437	438	440	-	490	491	493	-
		LO PR	125	126	129	-	132	134	137	-	139	140	144	-	144	146	149	-	150	151	154	-	157	158	161	-
	1800	MBh	47.9	48.5	49.9	-	47.5	48.1	49.5	-	46.2	46.9	48.3	-	44.2	44.8	46.2	-	41.6	42.3	43.7	-	39.3	40.0	41.3	-
		S/T	0.70	0.62	0.49	-	0.70	0.63	0.49	-	0.73	0.65	0.52	-	1.00	0.67	0.54	-	1.00	0.69	0.56	-	1.00	0.74	0.61	-
		ΔT	17	15	12	-	17	15	12	-	17	16	12	-	17	15	12	-	17	15	12	-	18	16	13	-
		KW	2.80	2.80	2.79	-	3.12	3.11	3.11	-	3.47	3.47	3.46	-	3.86	3.85	3.85	-	4.29	4.28	4.28	-	4.79	4.79	4.78	-
		Amps	10.2	10.2	10.2	-	11.7	11.7	11.6	-	13.3	13.3	13.3	-	15.1	15.0	15.0	-	17.0	17.0	17.0	-	19.3	19.3	19.3	-
		HI PR	262	263	265	-	302	304	305	-	345	346	348	-	391	392	394	-	440	441	443	-	493	494	496	-
		LO PR	127	129	132	-	135	136	140	-	141	143	146	-	147	149	152	-	152	154	157	-	159	161	164	-
75	1400	MBh	46.4	47.1	48.5	50.6	46.0	46.7	48.1	50.2	44.8	45.5	46.9	49.0	42.7	**43.4**	44.8	46.9	40.2	40.9	42.2	44.4	37.9	38.5	39.9	42.0
		S/T	0.74	0.67	0.53	0.39	0.75	0.67	0.54	0.40	1.00	0.70	0.56	0.42	1.00	**0.72**	0.58	0.44	1.00	0.74	0.60	0.46	1.00	1.00	0.66	0.51
		ΔT	23	21	18	15	23	21	18	14	23	22	18	15	23	**21**	18	14	23	21	18	14	24	22	19	15
		KW	2.77	2.76	2.76	2.78	3.08	3.08	3.08	3.10	3.44	3.44	3.43	3.46	3.82	**3.82**	3.82	3.84	4.25	4.25	4.25	4.27	4.76	4.76	4.75	4.77
		Amps	10.1	10.1	10.0	10.1	11.5	11.5	11.5	11.6	13.2	13.1	13.1	13.2	14.9	**14.9**	14.9	15.0	16.9	16.9	16.8	17.0	19.2	19.2	19.1	19.3
		HI PR	258	259	261	265	298	299	301	306	341	342	344	348	386	**388**	389	394	436	437	439	443	488	490	491	496
		LO PR	123	125	128	133	131	132	136	141	137	139	142	147	143	**145**	148	153	148	150	153	158	155	157	160	165
	1550	MBh	46.9	47.6	49.0	51.1	46.5	47.2	48.5	50.7	45.3	46.0	47.3	49.5	43.2	**43.9**	45.3	47.4	40.7	41.3	42.7	44.8	38.4	39.0	40.4	42.5
		S/T	0.79	0.71	0.58	0.44	0.79	0.72	0.58	0.44	1.00	0.74	0.61	0.47	1.00	**0.76**	0.63	0.49	1.00	0.78	0.65	0.51	1.00	1.00	0.70	0.56
		ΔT	22	21	17	14	22	20	17	14	23	21	17	14	22	**20**	17	14	22	20	17	13	23	21	18	15
		KW	2.78	2.78	2.77	2.80	3.10	3.09	3.09	3.11	3.45	3.45	3.44	3.47	3.84	**3.83**	3.83	3.85	4.27	4.26	4.26	4.28	4.77	4.77	4.76	4.79
		Amps	10.1	10.1	10.1	10.2	11.6	11.6	11.5	11.7	13.2	13.2	13.2	13.3	15.0	**15.0**	14.9	15.0	16.9	16.9	16.9	17.0	19.2	19.2	19.2	19.3
		HI PR	259	260	262	267	300	301	303	307	342	344	345	350	388	**389**	391	396	437	439	440	445	490	491	493	498
		LO PR	125	126	129	135	132	134	137	142	139	140	144	149	144	**146**	149	154	150	151	155	160	157	158	161	167
	1800	MBh	47.9	48.5	49.9	52.0	47.5	48.1	49.5	51.6	46.3	46.9	48.3	50.4	44.2	**44.8**	46.2	48.3	41.7	42.3	43.7	45.8	39.3	40.0	41.4	43.5
		S/T	0.82	0.75	0.62	0.47	1.00	0.76	0.62	0.48	1.00	0.78	0.65	0.50	1.00	**0.80**	0.67	0.52	1.00	0.82	0.69	0.55	1.00	1.00	0.74	0.60
		ΔT	21	19	16	13	21	19	16	12	21	20	16	13	21	**19**	16	12	21	19	16	12	22	20	17	13
		KW	2.80	2.79	2.79	2.81	3.11	3.11	3.11	3.13	3.47	3.47	3.46	3.49	3.85	**3.85**	3.85	3.87	4.28	4.28	4.28	4.30	4.79	4.79	4.78	4.80
		Amps	10.2	10.2	10.2	10.3	11.7	11.7	11.6	11.7	13.3	13.3	13.3	13.4	15.1	**15.0**	15.0	15.1	17.0	17.0	17.0	17.1	19.3	19.3	19.3	19.4
		HI PR	262	263	265	270	303	304	306	310	345	346	348	353	391	**392**	394	398	440	441	443	448	493	494	496	500
		LO PR	127	129	132	137	135	136	140	145	142	143	146	151	147	**149**	152	157	152	154	157	162	159	161	164	169

IDB: Entering Indoor Dry Bulb Temperature

Shaded area reflects ACCA (TVA) conditions

kW = Total system power

High and low pressures are measured at the liquid and suction service valves.

Amps = outdoor unit amps (comp.+fan)

Expanded Cooling Data — GSX140481** + CA*F4860*6** + EEP (cont.)

			Outdoor Ambient Temperature																							
			65				75				85				95				105				115			
			Entering Indoor Wet Bulb Temperature																							
IDB	Airflow		59	63	67	71	59	63	67	71	59	63	67	71	59	63	67	71	59	63	67	71	59	63	67	71
80	1400	MBh	46.7	47.3	48.7	50.8	46.3	46.9	48.3	50.4	45.1	45.7	47.1	49.2	43.0	43.6	**45.0**	47.1	40.4	41.1	42.5	44.6	38.1	38.8	40.2	42.3
		S/T	1.00	0.79	0.66	0.5	1.00	0.80	0.66	0.52	1.00	0.82	0.69	0.6	1.00	0.84	**0.71**	0.57	1.00	1.00	0.73	0.6	1.00	1.00	0.78	0.64
		ΔT	27	25	22	19	27	25	22	18	27	26	22	19	27	25	**22**	18	27	25	22	18	28	26	23	19
		KW	2.77	2.77	2.76	2.8	3.09	3.08	3.08	3.10	3.44	3.44	3.43	3.5	3.83	3.82	**3.82**	3.84	4.26	4.25	4.25	4.3	4.76	4.76	4.75	4.78
		Amps	10.1	10.1	10.0	10.2	11.5	11.5	11.5	11.6	13.2	13.1	13.1	13.2	14.9	14.9	**14.9**	15.0	16.9	16.9	16.9	17.0	19.2	19.2	19.2	19.3
		HI PR	258	259	261	266	299	300	302	306	341	342	344	349	387	388	**390**	394	436	437	439	444	489	490	492	496
		LO PR	124	125	129	134	131	133	136	141	138	140	143	148	144	145	**148**	153	149	151	154	159	156	157	160	166
	1550	MBh	47.2	47.8	49.2	51.3	46.8	47.4	48.8	50.9	45.5	46.2	47.6	49.7	43.5	44.1	45.5	47.6	40.9	41.6	43.0	45.1	38.6	39.3	40.6	42.8
		S/T	1.00	0.83	0.70	0.6	1.00	0.84	0.71	0.57	1.00	0.86	0.73	0.6	1.00	1.00	0.75	0.61	1.00	1.00	0.77	0.6	1.00	1.00	0.82	0.68
		ΔT	26	25	21	18	26	24	21	18	27	25	21	18	26	24	21	18	26	24	21	17	27	25	22	18
		KW	2.78	2.78	2.77	2.8	3.10	3.10	3.09	3.12	3.45	3.45	3.45	3.5	3.84	3.84	3.83	3.86	4.27	4.27	4.26	4.3	4.77	4.77	4.76	4.79
		Amps	10.1	10.1	10.1	10.2	11.6	11.6	11.6	11.7	13.2	13.2	13.2	13.3	15.0	15.0	14.9	15.1	16.9	16.9	16.9	17.0	19.3	19.2	19.2	19.3
		HI PR	260	261	263	267	300	302	303	308	343	344	346	350	389	390	392	396	438	439	441	445	491	492	493	498
		LO PR	125	127	130	135	133	134	138	143	139	141	144	149	145	146	150	155	150	152	155	160	157	159	162	167
	1800	MBh	48.1	48.8	50.2	52.3	47.7	48.4	49.8	51.9	46.5	47.2	48.5	50.7	44.4	45.1	46.5	48.6	41.9	42.5	43.9	46.0	39.6	40.2	41.6	43.7
		S/T	1.00	0.87	0.74	0.6	1.00	0.88	0.75	0.60	1.00	0.90	0.77	0.6	1.00	1.00	0.79	0.65	1.00	1.00	0.81	0.7	1.00	1.00	0.86	0.72
		ΔT	25	23	20	17	25	23	20	16	25	24	20	17	25	23	20	16	25	23	20	16	26	24	21	17
		KW	2.80	2.80	2.79	2.8	3.12	3.11	3.11	3.13	3.47	3.47	3.46	3.5	3.86	3.85	3.85	3.87	4.29	4.28	4.28	4.3	4.79	4.79	4.78	4.81
		Amps	10.2	10.2	10.2	10.3	11.7	11.7	11.6	11.7	13.3	13.3	13.3	13.4	15.1	15.0	15.0	15.1	17.0	17.0	17.0	17.1	19.3	19.3	19.3	19.4
		HI PR	263	264	266	270	303	304	306	311	346	347	349	353	391	392	394	399	441	442	444	448	493	494	496	501
		LO PR	128	130	133	138	136	137	140	145	142	144	147	152	148	149	152	157	153	155	158	163	160	161	165	170
85	1400	MBh	47.5	48.1	49.5	51.6	47.1	47.7	49.1	51.2	45.8	46.5	47.9	50.0	43.8	44.4	45.8	47.9	41.2	41.9	43.3	45.4	38.9	39.6	40.9	43.0
		S/T	1.00	0.89	0.76	0.62	1.00	0.90	0.76	0.62	1.00	1.00	0.79	0.65	1.00	1.00	0.81	0.67	1.00	1.00	0.83	0.69	1.00	1.00	1.00	0.74
		ΔT	31	29	26	22	31	29	25	22	31	29	26	22	31	29	25	22	30	29	25	22	31	30	26	23
		KW	2.77	2.77	2.77	2.79	3.09	3.09	3.08	3.11	3.45	3.45	3.44	3.46	3.83	3.83	3.82	3.85	4.26	4.26	4.25	4.28	4.77	4.76	4.76	4.78
		Amps	10.1	10.1	10.1	10.2	11.6	11.6	11.5	11.6	13.2	13.2	13.2	13.3	14.9	14.9	14.9	15.0	16.9	16.9	16.9	17.0	19.2	19.2	19.2	19.3
		HI PR	259	261	262	267	300	301	303	307	342	344	345	350	388	389	391	396	437	439	440	445	490	491	493	498
		LO PR	126	127	130	136	133	135	138	143	140	141	145	150	145	147	150	155	151	152	155	161	158	159	162	168
	1550	MBh	47.9	48.6	50.0	52.1	47.5	48.2	49.6	51.7	46.3	47.0	48.4	50.5	44.2	44.9	46.3	48.4	41.7	42.4	43.7	45.9	39.4	40.0	41.4	43.5
		S/T	1.00	0.93	0.80	0.66	1.00	1.00	0.81	0.67	1.00	1.00	0.83	0.69	1.00	1.00	0.85	0.71	1.00	1.00	0.87	0.73	1.00	1.00	1.00	0.78
		ΔT	30	28	25	21	30	28	25	21	30	28	25	21	30	28	25	21	30	28	24	21	31	29	26	22
		KW	2.79	2.78	2.78	2.80	3.10	3.10	3.10	3.12	3.46	3.46	3.45	3.48	3.84	3.84	3.84	3.86	4.27	4.27	4.27	4.29	4.78	4.78	4.77	4.79
		Amps	10.2	10.2	10.1	10.2	11.6	11.6	11.6	11.7	13.2	13.2	13.2	13.3	15.0	15.0	15.0	15.1	17.0	17.0	16.9	17.0	19.3	19.3	19.2	19.4
		HI PR	261	262	264	268	302	303	305	309	344	345	347	351	390	391	393	397	439	440	442	447	492	493	495	499
		LO PR	127	129	132	137	135	136	139	145	141	143	146	151	147	148	151	157	152	154	157	162	159	161	164	169
	1800	MBh	48.9	49.6	51.0	53.1	48.5	49.2	50.5	52.6	47.3	47.9	49.3	51.4	45.2	45.9	47.2	49.4	42.7	43.3	44.7	46.8	40.3	41.0	42.4	44.5
		S/T	1.00	0.97	0.84	0.70	1.00	1.00	0.85	0.70	1.00	1.00	0.87	0.73	1.00	1.00	0.89	0.75	1.00	1.00	1.00	0.77	1.00	1.00	1.00	0.82
		ΔT	29	27	24	20	29	27	23	20	29	27	24	20	29	27	23	20	28	27	23	20	30	28	24	21
		KW	2.80	2.80	2.80	2.82	3.12	3.12	3.11	3.14	3.48	3.48	3.47	3.49	3.86	3.86	3.85	3.88	4.29	4.29	4.28	4.31	4.80	4.79	4.79	4.81
		Amps	10.2	10.2	10.2	10.3	11.7	11.7	11.7	11.8	13.3	13.3	13.3	13.4	15.1	15.1	15.0	15.2	17.1	17.0	17.0	17.1	19.4	19.3	19.3	19.4
		HI PR	264	265	267	271	304	305	307	312	347	348	350	354	393	394	395	400	442	443	445	449	495	496	497	502
		LO PR	130	131	135	140	137	139	142	147	144	145	149	154	149	151	154	159	155	156	160	165	162	163	166	172

IDB: Entering Indoor Dry Bulb Temperature

Shaded area reflects AHRI conditions

kW = Total system power

High and low pressures are measured at the liquid and suction service valves.

Amps = outdoor unit amps (comp.+fan)

Expanded Cooling Data — GSX140601** + CA*F4961*6** + EEP + TXV

			Outdoor Ambient Temperature																							
			65				75				85				95				105				115			
			Entering Indoor Wet Bulb Temperature																							
IDB	Airflow		59	63	67	71	59	63	67	71	59	63	67	71	59	63	67	71	59	63	67	71	59	63	67	71
70	1550	MBh	58.8	59.6	61.3	-	58.2	59.1	60.8	-	56.7	57.5	59.3	-	54.1	54.9	56.7	-	50.9	51.7	53.5	-	48.0	48.8	50.6	-
		S/T	0.62	0.55	0.42	-	0.62	0.55	0.43	-	0.65	0.58	0.45	-	0.66	0.59	0.47	-	0.69	0.61	0.49	-	1.00	0.66	0.54	-
		ΔT	21	19	15	-	21	19	15	-	21	19	15	-	21	19	15	-	21	19	15	-	22	20	16	-
		KW	3.43	3.42	3.42	-	3.85	3.85	3.84	-	4.33	4.33	4.32	-	4.84	4.84	4.83	-	5.42	5.42	5.41	-	6.09	6.09	6.08	-
		Amps	13.2	13.2	13.1	-	15.1	15.1	15.1	-	17.3	17.3	17.3	-	19.7	19.6	19.6	-	22.3	22.3	22.2	-	25.4	25.4	25.3	-
		HI PR	270	271	273	-	312	313	315	-	356	358	359	-	404	405	407	-	455	457	459	-	510	511	513	-
		LO PR	117	118	121	-	124	125	128	-	130	131	134	-	135	136	139	-	140	141	144	-	146	148	151	-
	1750	MBh	59.7	60.5	62.3	-	59.2	60.0	61.7	-	57.7	58.5	60.2	-	55.1	55.9	57.6	-	51.9	52.7	54.4	-	49.0	49.8	51.5	-
		S/T	0.65	0.58	0.45	-	0.66	0.58	0.46	-	0.68	0.61	0.48	-	0.70	0.63	0.50	-	0.72	0.65	0.52	-	1.00	0.69	0.57	-
		ΔT	20	18	14	-	20	18	14	-	20	18	14	-	20	18	14	-	19	17	14	-	21	19	15	-
		KW	3.45	3.44	3.43	-	3.87	3.87	3.86	-	4.35	4.34	4.34	-	4.86	4.86	4.85	-	5.44	5.43	5.43	-	6.11	6.11	6.10	-
		Amps	13.3	13.3	13.2	-	15.2	15.2	15.2	-	17.4	17.4	17.3	-	19.8	19.7	19.7	-	22.4	22.4	22.3	-	25.5	25.5	25.4	-
		HI PR	272	273	275	-	314	316	318	-	359	360	362	-	406	408	409	-	458	459	461	-	513	514	516	-
		LO PR	118	120	123	-	125	127	130	-	132	133	136	-	137	138	141	-	142	143	146	-	148	150	153	-
	2000	MBh	61.2	62.0	63.7	-	60.6	61.5	63.2	-	59.1	60.0	61.7	-	56.5	57.3	59.1	-	53.3	54.2	55.9	-	50.4	51.3	53.0	-
		S/T	0.66	0.59	0.46	-	0.66	0.59	0.47	-	0.69	0.62	0.49	-	0.71	0.64	0.51	-	1.00	0.66	0.53	-	1.00	0.70	0.58	-
		ΔT	19	17	13	-	19	17	13	-	19	17	13	-	19	17	13	-	18	16	12	-	20	18	14	-
		KW	3.47	3.46	3.46	-	3.89	3.89	3.88	-	4.37	4.37	4.36	-	4.88	4.88	4.87	-	5.46	5.46	5.45	-	6.13	6.13	6.12	-
		Amps	13.4	13.3	13.3	-	15.3	15.3	15.3	-	17.5	17.5	17.4	-	19.8	19.8	19.8	-	22.5	22.5	22.4	-	25.6	25.6	25.5	-
		HI PR	275	276	278	-	317	319	320	-	362	363	365	-	409	410	412	-	461	462	464	-	516	517	519	-
		LO PR	121	123	126	-	128	130	133	-	134	136	139	-	140	141	144	-	145	146	149	-	151	152	155	-
75	1550	MBh	58.8	59.6	61.3	64.0	58.3	59.1	60.8	63.5	56.8	57.6	59.3	62.0	54.1	**55.0**	56.7	59.3	51.0	51.8	53.5	56.2	48.1	48.9	50.6	53.3
		S/T	0.74	0.67	0.54	0.41	0.74	0.67	0.55	0.41	0.77	0.70	0.57	0.44	1.00	**0.71**	0.59	0.46	1.00	0.73	0.61	0.48	1.00	0.78	0.66	0.52
		ΔT	25	23	20	16	25	23	19	16	26	24	20	16	25	**23**	19	16	25	23	19	15	26	24	20	17
		KW	3.42	3.42	3.41	3.45	3.85	3.85	3.84	3.87	4.33	4.32	4.32	4.35	4.84	**4.84**	4.83	4.86	5.42	5.41	5.41	5.44	6.09	6.09	6.08	6.11
		Amps	13.2	13.1	13.1	13.3	15.1	15.1	15.1	15.2	17.3	17.3	17.2	17.4	19.7	**19.6**	19.6	19.8	22.3	22.3	22.2	22.4	25.4	25.4	25.3	25.5
		HI PR	270	271	273	278	312	314	315	320	357	358	360	364	404	**405**	407	412	456	457	459	463	511	512	514	518
		LO PR	117	118	121	126	124	125	128	133	130	131	134	139	135	**136**	139	144	140	141	144	149	146	148	151	155
	1750	MBh	59.7	60.6	62.3	64.9	59.2	60.0	61.8	64.4	57.7	58.5	60.3	62.9	55.1	**55.9**	57.6	60.3	51.9	52.7	54.5	57.1	49.0	49.8	51.6	54.2
		S/T	0.77	0.70	0.57	0.44	0.78	0.70	0.58	0.45	0.80	0.73	0.60	0.47	1.00	**0.75**	0.62	0.49	1.00	0.77	0.64	0.51	1.00	0.81	0.69	0.56
		ΔT	24	22	18	15	24	22	18	14	25	23	19	15	24	**22**	18	14	24	22	18	14	25	23	19	15
		KW	3.44	3.44	3.43	3.46	3.87	3.87	3.86	3.89	4.34	4.34	4.33	4.37	4.86	**4.86**	4.85	4.88	5.44	5.43	5.42	5.46	6.11	6.11	6.10	6.13
		Amps	13.3	13.2	13.2	13.4	15.2	15.2	15.2	15.3	17.4	17.4	17.3	17.5	19.7	**19.7**	19.7	19.8	22.4	22.4	22.3	22.5	25.5	25.4	25.4	25.6
		HI PR	272	274	276	280	315	316	318	322	359	360	362	367	407	**408**	410	414	458	459	461	466	513	514	516	521
		LO PR	118	120	123	128	125	127	130	135	132	133	136	141	137	**138**	141	146	142	143	146	151	148	150	153	157
	2000	MBh	61.2	62.0	63.8	66.4	60.7	61.5	63.2	65.9	59.2	60.0	61.7	64.4	56.6	**57.4**	59.1	61.8	53.4	54.2	55.9	58.6	50.5	51.3	53.0	55.7
		S/T	0.78	0.71	0.58	0.45	0.78	0.71	0.59	0.46	1.00	0.74	0.61	0.48	1.00	**0.75**	0.63	0.50	1.00	0.78	0.65	0.52	1.00	0.82	0.70	0.56
		ΔT	23	21	17	13	23	21	17	13	23	21	18	14	23	**21**	17	13	23	21	17	13	24	22	18	14
		KW	3.46	3.46	3.45	3.49	3.89	3.89	3.88	3.91	4.37	4.36	4.36	4.39	4.88	**4.88**	4.87	4.90	5.46	5.45	5.45	5.48	6.13	6.13	6.12	6.15
		Amps	13.3	13.3	13.3	13.4	15.3	15.3	15.3	15.4	17.5	17.5	17.4	17.6	19.8	**19.8**	19.8	19.9	22.5	22.5	22.4	22.6	25.6	25.5	25.5	25.7
		HI PR	275	277	278	283	318	319	321	325	362	363	365	370	410	**411**	413	417	461	462	464	469	516	517	519	523
		LO PR	121	123	126	131	128	130	133	138	134	136	139	144	140	**141**	144	149	145	146	149	154	151	152	155	160

IDB: Entering Indoor Dry Bulb Temperature

Shaded area reflects ACCA (TVA) conditions

kW = Total system power

High and low pressures are measured at the liquid and suction service valves.

Amps = outdoor unit amps (comp.+fan)

Expanded Cooling Data — GSX140601** + CA*F4961*6** + EEP + TXV (cont.)

			Outdoor Ambient Temperature																							
			65				75				85				95				105				115			
			Entering Indoor Wet Bulb Temperature																							
IDB	Airflow		59	63	67	71	59	63	67	71	59	63	67	71	59	63	67	71	59	63	67	71	59	63	67	71
80	1550	MBh	59.1	59.9	61.6	64.3	58.6	59.4	61.1	63.8	57.1	57.9	59.6	62.3	54.4	55.3	**57.0**	59.6	51.3	52.1	53.8	56.5	48.4	49.2	50.9	53.6
		S/T	0.85	0.78	0.66	0.5	1.00	0.79	0.66	0.53	1.00	0.81	0.69	0.6	1.00	0.83	**0.70**	0.57	1.00	0.85	0.72	0.6	1.00	1.00	0.77	0.64
		ΔT	30	28	24	20	30	28	24	20	30	28	24	20	30	28	**24**	20	30	28	24	20	31	29	25	21
		KW	3.43	3.42	3.42	3.5	3.85	3.85	3.84	3.87	4.33	4.32	4.32	4.4	4.84	4.84	**4.83**	4.87	5.42	5.42	5.41	5.4	6.09	6.09	6.08	6.12
		Amps	13.2	13.2	13.1	13.3	15.1	15.1	15.1	15.2	17.3	17.3	17.3	17.4	19.7	19.6	**19.6**	19.8	22.3	22.3	22.2	22.4	25.4	25.4	25.3	25.5
		HI PR	271	272	274	278	313	314	316	321	357	358	360	365	405	406	**408**	413	456	457	459	464	511	512	514	519
		LO PR	117	118	121	126	124	125	128	133	130	132	135	139	135	137	**140**	145	140	142	145	150	147	148	151	156
	1750	MBh	60.0	60.9	62.6	65.2	59.5	60.3	62.1	64.7	58.0	58.8	60.6	63.2	55.4	56.2	57.9	60.6	52.2	53.0	54.8	57.4	49.3	50.1	51.9	54.5
		S/T	0.89	0.81	0.69	0.6	1.00	0.82	0.70	0.56	1.00	0.84	0.72	0.6	1.00	0.86	0.74	0.60	1.00	0.88	0.76	0.6	1.00	1.00	0.80	0.67
		ΔT	29	27	23	19	29	27	23	19	29	27	23	19	29	27	23	19	29	26	23	19	30	28	24	20
		KW	3.44	3.44	3.43	3.5	3.87	3.87	3.86	3.89	4.35	4.34	4.34	4.4	4.86	4.86	4.85	4.88	5.44	5.43	5.43	5.5	6.11	6.11	6.10	6.13
		Amps	13.3	13.2	13.2	13.4	15.2	15.2	15.2	15.3	17.4	17.4	17.3	17.5	19.7	19.7	19.7	19.8	22.4	22.4	22.3	22.5	25.5	25.5	25.4	25.6
		HI PR	273	274	276	281	315	316	318	323	359	361	362	367	407	408	410	415	458	460	462	466	513	514	516	521
		LO PR	119	120	123	128	126	127	130	135	132	134	136	141	137	139	142	146	142	144	147	152	149	150	153	158
	2000	MBh	61.5	62.3	64.1	66.7	61.0	61.8	63.5	66.2	59.5	60.3	62.0	64.7	56.9	57.7	59.4	62.1	53.7	54.5	56.2	58.9	50.8	51.6	53.3	56.0
		S/T	0.89	0.82	0.70	0.6	1.00	0.83	0.70	0.57	1.00	0.85	0.73	0.6	1.00	0.87	0.75	0.61	1.00	1.00	0.77	0.6	1.00	1.00	0.81	0.68
		ΔT	28	26	22	18	28	26	22	18	28	26	22	18	28	26	22	18	27	25	21	18	29	27	23	19
		KW	3.47	3.46	3.46	3.5	3.89	3.89	3.88	3.91	4.37	4.36	4.36	4.4	4.88	4.88	4.87	4.90	5.46	5.46	5.45	5.5	6.13	6.13	6.12	6.16
		Amps	13.4	13.3	13.3	13.5	15.3	15.3	15.3	15.4	17.5	17.5	17.4	17.6	19.8	19.8	19.8	19.9	22.5	22.5	22.4	22.6	25.6	25.6	25.5	25.7
		HI PR	276	277	279	284	318	319	321	326	362	364	365	370	410	411	413	418	461	463	464	469	516	517	519	524
		LO PR	122	123	126	131	129	130	133	138	135	136	139	144	140	142	144	149	145	147	150	154	152	153	156	161
85	1550	MBh	60.1	60.9	62.6	65.3	59.5	60.4	62.1	64.7	58.0	58.8	60.6	63.2	55.4	56.2	58.0	60.6	52.2	53.1	54.8	57.4	49.3	50.2	51.9	54.5
		S/T	1.00	0.88	0.75	0.62	1.00	0.88	0.76	0.62	1.00	0.91	0.78	0.65	1.00	1.00	0.80	0.67	1.00	1.00	0.82	0.69	1.00	1.00	0.87	0.73
		ΔT	34	32	28	24	34	32	28	24	34	32	28	24	34	32	28	24	34	32	28	24	35	33	29	25
		KW	3.43	3.43	3.42	3.46	3.86	3.86	3.85	3.88	4.34	4.33	4.33	4.36	4.85	4.85	4.84	4.87	5.43	5.42	5.42	5.45	6.10	6.10	6.09	6.12
		Amps	13.2	13.2	13.2	13.3	15.2	15.1	15.1	15.3	17.3	17.3	17.3	17.4	19.7	19.7	19.7	19.8	22.3	22.3	22.3	22.4	25.4	25.4	25.4	25.5
		HI PR	272	273	275	280	314	315	317	322	358	360	361	366	406	407	409	414	457	459	460	465	512	513	515	520
		LO PR	119	120	123	128	126	127	130	135	132	133	136	141	137	138	141	146	142	144	146	151	148	150	153	158
	1750	MBh	61.0	61.8	63.6	66.2	60.5	61.3	63.0	65.7	59.0	59.8	61.5	64.2	56.4	57.2	58.9	61.6	53.2	54.0	55.7	58.4	50.3	51.1	52.8	55.5
		S/T	1.00	0.91	0.78	0.65	1.00	0.91	0.79	0.66	1.00	0.94	0.81	0.68	1.00	1.00	0.83	0.70	1.00	1.00	0.85	0.72	1.00	1.00	0.90	0.77
		ΔT	33	31	27	23	33	31	27	23	33	31	27	23	33	31	27	23	33	31	27	23	34	32	28	24
		KW	3.45	3.45	3.44	3.48	3.88	3.88	3.87	3.90	4.36	4.35	4.34	4.38	4.87	4.87	4.86	4.89	5.45	5.44	5.44	5.47	6.12	6.12	6.11	6.14
		Amps	13.3	13.3	13.3	13.4	15.3	15.2	15.2	15.4	17.4	17.4	17.4	17.5	19.8	19.8	19.7	19.9	22.4	22.4	22.4	22.5	25.5	25.5	25.5	25.6
		HI PR	274	275	277	282	316	318	319	324	361	362	364	368	408	410	411	416	460	461	463	467	515	516	518	522
		LO PR	121	122	125	130	128	129	132	137	134	135	138	143	139	140	143	148	144	145	148	153	150	152	155	160
	2000	MBh	62.5	63.3	65.0	67.7	62.0	62.8	64.5	67.2	60.4	61.3	63.0	65.6	57.8	58.7	60.4	63.0	54.7	55.5	57.2	59.9	51.7	52.6	54.3	56.9
		S/T	1.00	0.92	0.79	0.66	1.00	0.92	0.80	0.67	1.00	1.00	0.82	0.69	1.00	1.00	0.84	0.71	1.00	1.00	0.86	0.73	1.00	1.00	0.91	0.77
		ΔT	32	30	26	22	32	30	26	22	32	30	26	22	32	30	26	22	31	29	26	22	33	31	27	23
		KW	3.47	3.47	3.46	3.50	3.90	3.90	3.89	3.92	4.38	4.37	4.37	4.40	4.89	4.89	4.88	4.91	5.47	5.46	5.46	5.49	6.14	6.14	6.13	6.16
		Amps	13.4	13.4	13.3	13.5	15.3	15.3	15.3	15.4	17.5	17.5	17.5	17.6	19.9	19.9	19.8	20.0	22.5	22.5	22.5	22.6	25.6	25.6	25.6	25.7
		HI PR	277	278	280	285	319	321	322	327	364	365	367	371	411	412	414	419	463	464	466	470	518	519	521	525
		LO PR	124	125	128	133	131	132	135	140	137	138	141	146	142	143	146	151	147	148	151	156	153	155	158	162

IDB: Entering Indoor Dry Bulb Temperature

Shaded area reflects AHRI conditions

kW = Total system power

High and low pressures are measured at the liquid and suction service valves.

Amps = outdoor unit amps (comp.+fan)

GSX140181** / CA*FA2422*6A* W/.051" ORIFICE CONDITIONS: 80 °F IBD, 67 °F IWB @ 600 CFM				
OUTDOOR TEM. ° F.	TOTAL BTUH	SENSIBLE BTUH	LATENT BTUH	TOTAL WATTS
75	19,300	14,668	4,632	1,070
80	19,100	14,516	4,584	1,120
85	18,820	14,303	4,517	1,177
90	18,400	13,984	4,416	1,240
95	**18,000**	**13,680**	**4,320**	**1,294**
100	17,550	13,338	4,212	1,360
105	17,000	12,920	4,080	1,424
110	16,510	12,548	3,962	1,505
115	16,050	12,198	3,852	1,577
TVA Conditions @ 95° OD DB, 75° ID DB 63° ID WB				
95°	**17,357**	**13,365**	**3,992**	**1,296**

GSX140191** / CA*F3636*6D* W/.053" ORIFICE CONDITIONS: 80 °F IBD, 67 °F IWB @ 550 CFM				
OUTDOOR TEM. ° F.	TOTAL BTUH	SENSIBLE BTUH	LATENT BTUH	TOTAL WATTS
75	18,900	13,041	5,859	1,160
80	18,650	13,145	5,506	1,225
85	18,400	13,248	5,152	1,290
90	18,000	13,136	4,864	1,360
95	**17,600**	**13,024**	**4,576**	**1,430**
100	17,100	12,820	4,280	1,530
105	16,600	12,616	3,984	1,590
110	16,150	12,667	3,484	1,680
115	15,700	12,717	2,983	1,770
TVA Conditions @ 95° OD DB, 75° ID DB 63° ID WB				
95°	**17,000**	**12,750**	**4,250**	**1,430**

GSX140241** / CA*F3636*6D* W/.057" ORIFICE CONDITIONS: 80 °F IBD, 67 °F IWB @ 725 CFM				
OUTDOOR TEM. ° F.	TOTAL BTUH	SENSIBLE BTUH	LATENT BTUH	TOTAL WATTS
75	24,360	16,895	7,465	1,474
80	24,070	16,904	7,166	1,526
85	23,780	16,912	6,868	1,577
90	23,490	16,972	6,518	1,623
95	**23,200**	**17,031**	**6,169**	**1,668**
100	22,620	16,912	5,708	1,707
105	22,040	16,793	5,247	1,746
110	21,228	16,239	4,989	1,779
115	20,416	15,686	4,730	1,813
TVA Conditions @ 95° OD DB, 75° ID DB 63° ID WB				
95°	**21,498**	**16,861**	**4,637**	**1,596**

GSX140251** / CA*F3636*6D* W/.057" ORIFICE CONDITIONS: 80 °F IBD, 67 °F IWB @ 700 CFM				
OUTDOOR TEM. ° F.	TOTAL BTUH	SENSIBLE BTUH	LATENT BTUH	TOTAL WATTS
75	25,500	17,085	8,415	1,570
80	25,200	17,258	7,943	1,660
85	24,900	17,430	7,470	1,750
90	24,350	17,283	7,067	1,850
95	**23,800**	**17,136**	**6,664**	**1,950**
100	23,150	16,893	6,257	2,060
105	22,500	16,650	5,850	2,170
110	21,900	16,739	5,162	2,300
115	21,300	16,827	4,473	2,430
TVA Conditions @ 95° OD DB, 75° ID DB 63° ID WB				
95°	**23,000**	**16,790**	**6,210**	**1,950**

GSX140301K* / CA*F3642*6D* W/.067" Orifice Conditions: 80 °F IBD, 67 °F IWB @ 1000 CFM				
OUTDOOR TEM. ° F.	TOTAL BTUH	SENSIBLE BTUH	LATENT BTUH	TOTAL WATTS
75	31,100	23,177	7,923	1,950
80	30,800	23,361	7,439	2,060
85	30,400	23,449	6,951	2,160
90	29,700	23,233	6,467	2,280
95	**29,000**	**22,958**	**6,042**	**2,390**
100	28,200	22,600	5,600	2,520
105	27,400	22,322	5,078	2,650
110	26,600	22,222	4,378	2,800
115	25,900	22,489	3,411	2,950
TVA Conditions @ 95° OD DB, 75° ID DB 63° ID WB				
95°	**27,800**	**20,850**	**6,950**	**2,420**

GSX140301N*+CA*FA3626*6A* W/.067" Orifice Conditions: 80 °F IBD, 67 °F IWB @ 1000 CFM				
OUTDOOR TEM. ° F.	TOTAL BTUH	SENSIBLE BTUH	LATENT BTUH	TOTAL WATTS
75	30,700	21,183	9,517	2,022
80	30,300	21,210	9,090	2,139
85	29,900	21,229	8,671	2,255
90	29,250	21,060	8,190	2,381
95	**28,600**	**20,878**	**7,722**	**2,506**
100	27,800	19,460	8,340	2,646
105	27,000	20,250	6,750	2,786
110	26,250	20,344	5,906	2,951
115	25,500	20,400	5,100	3,116
TVA Conditions @ 95° OD DB, 75° ID DB 63° ID WB				
95°	**27,600**	**20,424**	**7,176**	**2,508**

GSX140311 / CA*F3137*6D* W/.063" Orifice**
Conditions: 80 °F IBD, 67 °F IWB @ 1000 CFM

Outdoor Tem. ° F.	Total Btuh	Sensible Btuh	Latent Btuh	Total Watts
75	30,700	22,718	7,982	1,920
80	30,300	22,871	7,430	2,025
85	29,900	23,023	6,877	2,130
90	29,250	22,809	6,442	2,245
95	**28,600**	**22,594**	**6,006**	**2,360**
100	27,800	22,232	5,568	2,490
105	27,000	21,870	5,130	2,620
110	26,250	21,900	4,350	2,770
115	25,500	21,930	3,570	2,920
TVA Conditions @ 95° OD DB, 75° ID DB 63° ID WB				
95°	**27,600**	**20,080**	**5,520**	**2,360**

GSX140361 / CA*F3642*6D* W/.068" Orifice**
Conditions: 80 °F IBD, 67 °F IWB @ 1200 CFM

Outdoor Tem. ° F.	Total Btuh	Sensible Btuh	Latent Btuh	Total Watts
75	36,700	25,690	11,010	2,330
80	36,250	25,733	10,517	2,460
85	35,800	25,776	10,024	2,590
90	35,000	25,542	9,458	2,730
95	**34,200**	**25,308**	**8,892**	**2,870**
100	33,250	24,928	8,322	3,030
105	32,300	24,548	7,752	3,190
110	31,400	24,627	6,774	3,370
115	30,500	24,705	5,795	3,550
TVA Conditions @ 95° OD DB, 75° ID DB 63° ID WB				
95°	**33,000**	**24,750**	**8,250**	**2,870**

GSX140371 / CA*F3137*6D* W/ .071" Orifice**
Conditions: 80 °F IBD, 67 °F IWB @ 1100 CFM

Outdoor Tem. ° F.	Total Btuh	Sensible Btuh	Latent Btuh	Total Watts
75	36,500	25,915	10,585	2,260
80	36,050	26,130	9,921	2,400
85	35,600	26,344	9,256	2,540
90	34,800	26,092	8,708	2,675
95	**34,000**	**25,840**	**8,160**	**2,810**
100	33,050	25,439	7,611	2,970
105	32,100	25,038	7,062	3,130
110	31,250	25,135	6,115	3,315
115	30,400	25,232	5,168	3,500
TVA Conditions @ 95° OD DB, 75° ID DB 63° ID WB				
95°	**32,800**	**25,256**	**7,544**	**2,810**

GSX140421 / CA*F4961*6D* W/.074" Orifice**
Conditions: 80 °F IBD, 67 °F IWB @ 1400 CFM

Outdoor Tem. ° F.	Total Btuh	Sensible Btuh	Latent Btuh	Total Watts
75	41,800	30,932	10,868	2,600
80	41,300	31,174	10,126	2,750
85	40,800	31,416	9,384	2,900
90	39,900	31,113	8,787	3,060
95	**39,000**	**30,810**	**8,190**	**3,220**
100	37,900	30,309	7,591	3,400
105	36,800	29,808	6,992	3,580
110	35,800	30,042	5,758	3,795
115	34,800	30,276	4,524	4,010
TVA Conditions @ 95° OD DB, 75° ID DB 63° ID WB				
95°	**37,600**	**30,080**	**7,520**	**3,220**

GSX140431 / CA*F4961*6D* W/.074" Orifice**
Conditions: 80 °F IBD, 67 °F IWB @ 1400 CFM

Outdoor Tem. ° F.	Total Btuh	Sensible Btuh	Latent Btuh	Total Watts
75	41,800	30,932	10,868	2,600
80	41,300	31,174	10,126	2,750
85	40,800	31,416	9,384	2,900
90	39,900	31,113	8,787	3,060
95	**39,000**	**30,810**	**8,190**	**3,220**
100	37,900	30,309	7,591	3,400
105	36,800	29,808	6,992	3,580
110	35,800	30,042	5,758	3,795
115	34,800	30,276	4,524	4,010
TVA Conditions @ 95° OD DB, 75° ID DB 63° ID WB				
95°	**37,600**	**30,080**	**7,520**	**3,220**

GSX140481K / CA*F4860*6D* W/.078" Orifice
Conditions: 80 °F IBD, 67 °F IWB @ 1400 CFM

Outdoor Tem. ° F.	Total Btuh	Sensible Btuh	Latent Btuh	Total Watts
75	48,300	31,878	16,422	3,080
80	47,700	32,189	15,511	3,255
85	47,100	32,500	14,600	3,430
90	46,050	32,225	13,825	3,625
95	**45,000**	**31,950**	**13,050**	**3,820**
100	43,750	31,488	12,263	4,035
105	42,500	31,025	11,475	4,250
110	41,350	31,191	10,160	4,500
115	40,200	31,356	8,844	4,750
TVA Conditions @ 95° OD DB, 75° ID DB 63° ID WB				
95°	**43,400**	**31,248**	**12,152**	**3,820**

GSX140601** / CA*F4961*6D* W/.088" Orifice Conditions: 80 °F IBD, 67 °F IWB @ 1550 CFM				
Outdoor Tem. ° F.	**Total Btuh**	**Sensible Btuh**	**Latent Btuh**	**Total Watts**
75	61,100	40,326	20,774	3,840
80	60,350	40,725	19,625	4,080
85	59,600	41,124	18,476	4,320
90	58,300	40,512	17,788	4,575
95	**57,000**	**39,900**	**17,100**	**4,830**
100	55,400	39,318	16,082	5,120
105	53,800	38,736	15,064	5,410
110	52,350	38,965	13,386	5,745
115	50,900	39,193	11,707	6,080
TVA Conditions @ 95° OD DB, 75° ID DB 63° ID WB				
95°	**55,000**	**39,050**	**15,950**	**4,840**

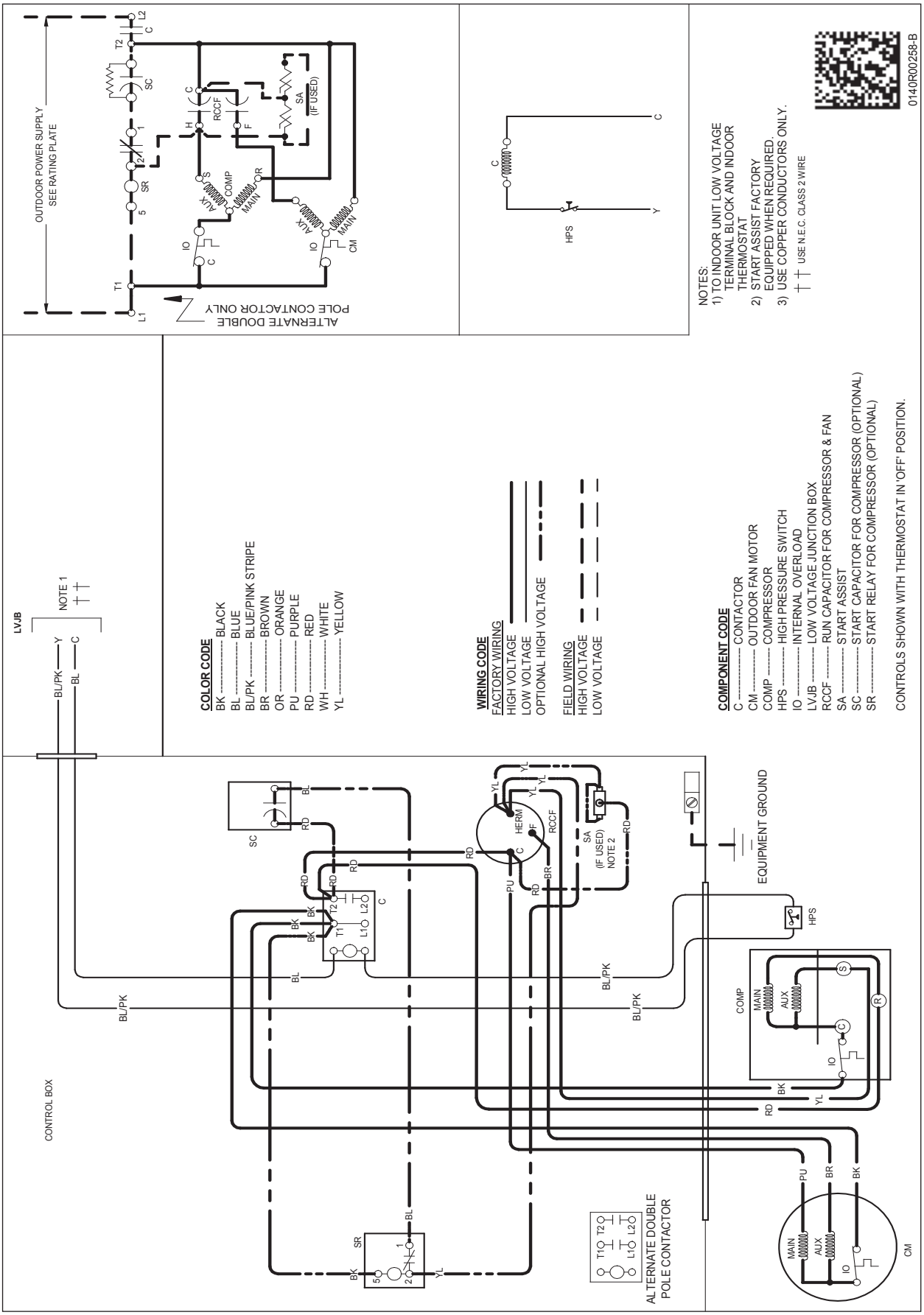

WARNING

High Voltage: Disconnect all power before servicing or installing this unit. Multiple power sources may be present. Failure to do so may cause property damage, personal injury, or death.

Wiring is subject to change. Always refer to the wiring diagram or the unit for the most up-to-date wiring.

See Notes on Page 71.

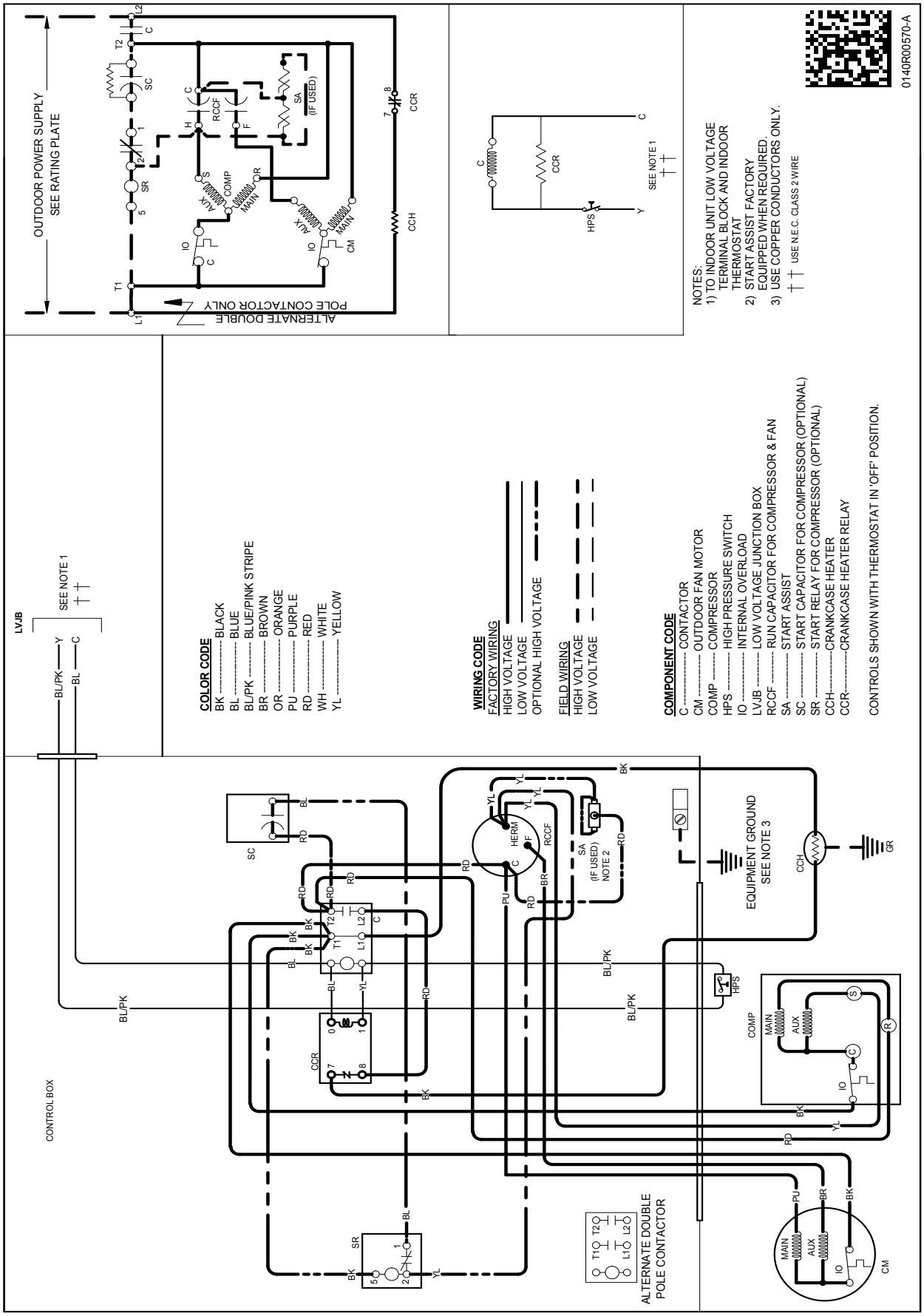

WARNING **High Voltage:** Disconnect all power before servicing or installing this unit. Multiple power sources may be present. Failure to do so may cause property damage, personal injury, or death.

Wiring is subject to change. Always refer to the wiring diagram or the unit for the most up-to-date wiring.

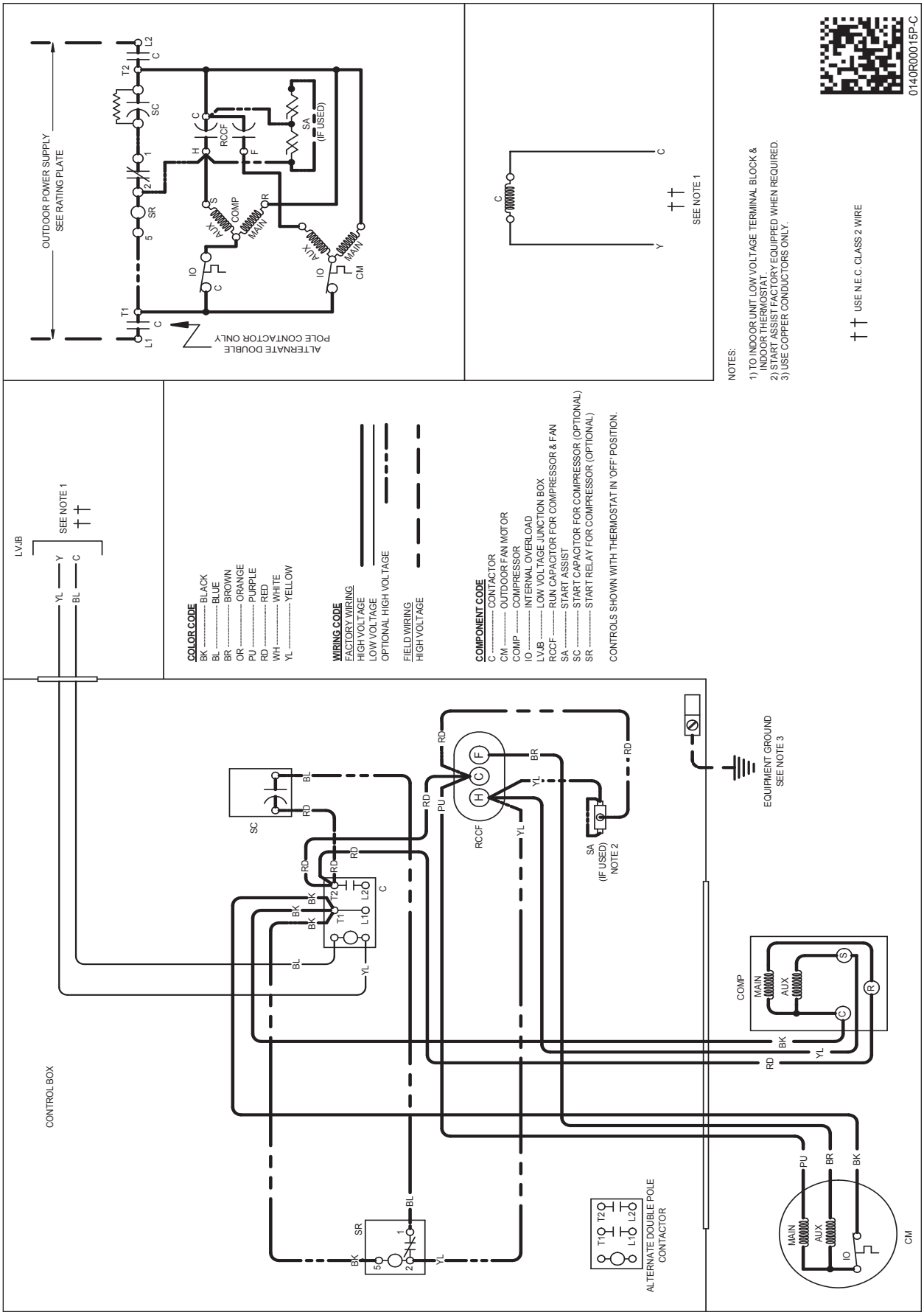

WARNING

High Voltage: Disconnect all power before servicing or installing this unit. Multiple power sources may be present. Failure to do so may cause property damage, personal injury, or death.

Wiring is subject to change. Always refer to the wiring diagram or the unit for the most up-to-date wiring.

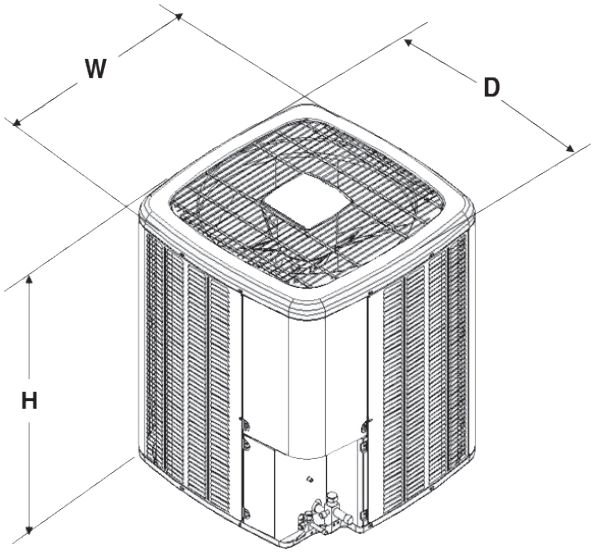

Model	Dimensions		
	W"	D"	H"
GSX140181**	23	23	25¾
GSX140191**	26	26	27½
GSX140241**	26	26	27½
GSX140251**	26	26	32½
GSX140301**	29	29	32½
GSX140311**	29	29	32½
GSX140361**	29	29	32½
GSX140371**	29	29	32½
GSX140421**	29	29	36¼
GSX140431**	29	29	36¼
GSX140481**	35½	35½	36¼
GSX140601**	35½	35½	38¼

ECN	REV	ZONE	DESCRIPTION	CHK	DR	DATE
XXXXXXX	A	XXXXX	INITIAL RELEASE	-		

THE GOODMAN MANUFACTURING COMPANY, L.P.

GSX14

SPECIAL CHARACTERISTICS:
6σ = 6SIGMA
◇ = CRITICAL CHARACTERISTIC
⬠ = SIGNIFICANT CHARACTERISTIC

COMPONENTS AND MATERIALS SPECIFIED HEREIN WILL ALSO CONFORM TO THE APPLICABLE SECTION OF GOODMAN MSP 824.01 WORKMANSHIP STANDARD FOR FIT, FEEL AND FINISH.

CONFIDENTIAL PROPERTY OF THE GOODMAN MANUFACTURING COMPANY, L.P. NOT TO BE DISCLOSED TO OTHERS, COPIED, OR USED FOR ANY PURPOSE EXCEPT AS AUTHORIZED IN WRITING. MUST BE RETURNED UPON DEMAND, ON COMPLETION OF ORDER, OR OTHER PURPOSE FOR WHICH IT WAS LENT.

DRAWING TO BE INTERPRETED IN ACCORDANCE WITH ASME Y14.100
DIMENSIONS ARE IN INCHES UNLESS OTHERWISE NOTED
TOLERANCES: ANGLES ± 1.5° X ± .1 XX ± .03 XXX ± .015 HOLE Ø ± .005 TUBE CUT LG ± .063
DWN BY: GL | ENG | DO NOT SCALE DRAWING
CHK BY: | DATE | SHT 1 OF 1
REV A

Accessories

Model #	Description	GSX14 018**	GSX14 019**	GSX14 024/25**	GSX14 030/31**	GSX14 036/37**	GSX14 042/43**	GSX14 048**	GSX14 060**
ABK-20	Anchor Bracket Kit ^		X	X	X	X	X	X	X
ABK-21	Anchor Bracket Kit ^	X							
ASC-01	Anti-Short Cycle Kit	X		X	X	X	X	X	X
CSR-U-1	Hard-start Kit	X		X	X	X			
CSR-U-2	Hard-start Kit						X	X	X
CSR-U-3	Hard-start Kit							X	X
FSK01A[1]	Freeze Protection Kit	X		X	X	X	X	X	X
LSK02A[2]	Liquid Line Solenoid Kit	X		X	X	X	X	X	X
LAKT01A	Low-Ambient Kit	X		X	X	X	X	X	X
0130R00000S	Low-Pressure Switch Kit	X		X	X	X	X	X	X
TX2N4A[2]	TXV Kit	X		X					
TX3N4[2]	TXV Kit				X	X			
TX5N4[2]	TXV Kit						X	X	X

^ Contains 20 brackets; four brackets needed to anchor unit to pad

[1] Installed on indoor coil

[2] Field-installed, non-bleed, expansion valve kit — Condensing units and heat pumps with rotary compressors require start-assist components when used in conjunction with an indoor coil using a non-bleed thermal expansion valve refrigerant metering device.

All AHRI system ratings are accessible in the System Configurator tool via PartnerLink.

Goodman Manufacturing Company, L.P., reserves the right to discontinue, or change at any time, specifications or designs without notice or without incurring obligations. ©2020 Goodman Manufacturing Company, L.P. • Houston, Texas • Printed in the USA.