FACR15SA

15.5K Rooftop Unit for Furrion Chill Air Conditioner System

FACR15SA-BL

FACR15SA-PS

Main Features

- ULTRA QUIET
- HIGH COOLING CAPACITY
- HIGH ENERGY EFFICIENCY
- LIGHTWEIGHT
- AERODYNAMIC DESIGN
- PROFILE
- UV RESISTANT
- VIBRATIONSMART™
- CLIMATESMART™

FURRION

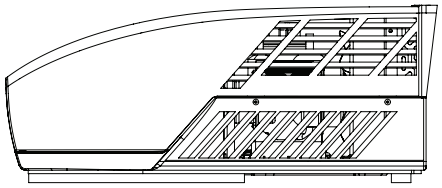

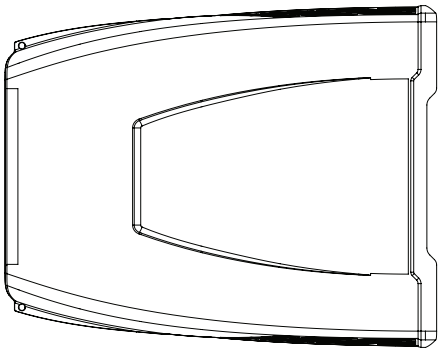

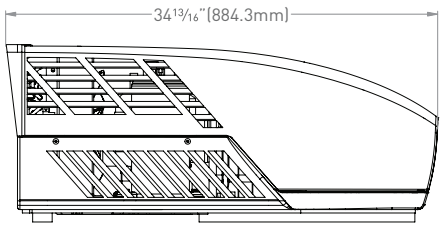

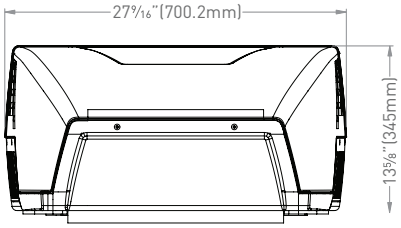

Specifications

Performance

Capacity	15,500 BTU
EER	2.19
Set Temperature Range	60°F to 86°F (16°C to 30°C)
Outdoor Sound Pressure Level	80dB
IP class	IP24
Refrigerant	R410A

Electrical

Volts/Frequency/Phase	115V/60Hz/1Ph
Power (Cooling)	1,720 Watts
Amps (Cooling)	15.4

Features

Eco-friendly Refrigerant	√
Rubber Damper	√
Dual Fan Motors	√
Thermo-insulated Heat	√

Exchanger Enclosure

3 Fan Speeds (High/Med/Low)	√
Overload Protection	√

Dimensions & Weight

Product Dimension (WxHxD)	27.56 x 13.62 x 34.81" (700.2 x 345 x 884.3mm)
Packaging Dimension (WxHxD)	35.69 x 28.44 x 15.5" (906 x 722 x 393mm)
Net Weight (lbs/kg)	81.6 / 37
Gross Weight (lbs/kg)	90.4 / 41

Container Load Information

20' Container Load (pcs)	120
40' Container Load (pcs)	252
40'HQ Container Load (pcs)	252

Customer Service & Technical Support: Email: support@furrion.com Tel: (888) 354 5792 www.furrion.com

Furrion® and the Furrion logo are trademarks licensed for use by Furrion Ltd. and registered in the U.S. and other countries. © 2007-2020 Furrion Ltd.

FACT12LA

Air Distribution Box with Electronic Control and LED Light for Furrion Chill Air Conditioner System

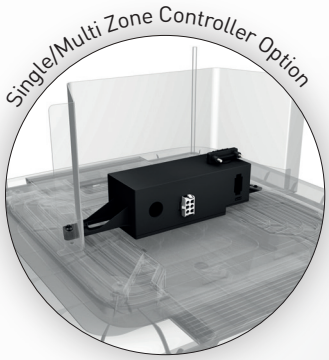

FACT12LA-PS

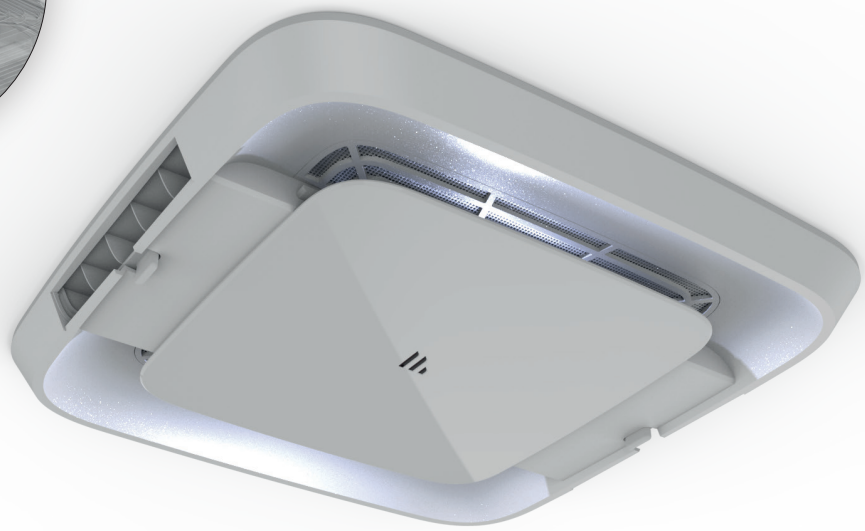

Main Features

- 3 FAN SPEEDS
- 2 WAY AIR FLOW
- SLEEP MODE
- AUTO FAN OPERATION
- 2 PROGRAM TIMERS
- LED LIGHTING
- DETACHABLE FILTER
- AUTO RESTART
- EASY INSTALLATION
- CAN BE USED FOR DUCTED / NON-DUCTED

FURRION

Air Distribution Box

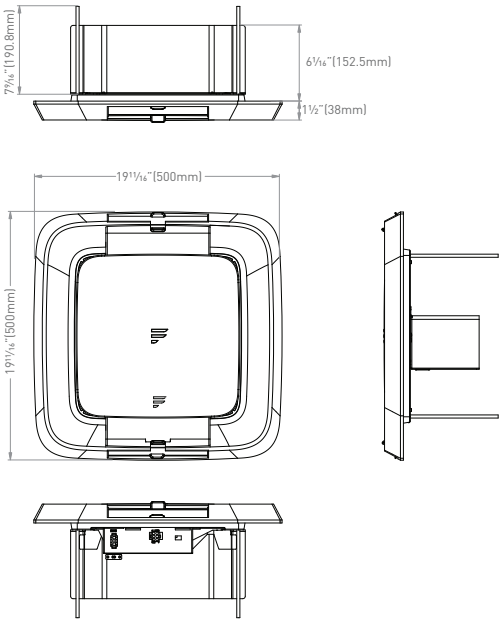

Single/Multi Zone Controller

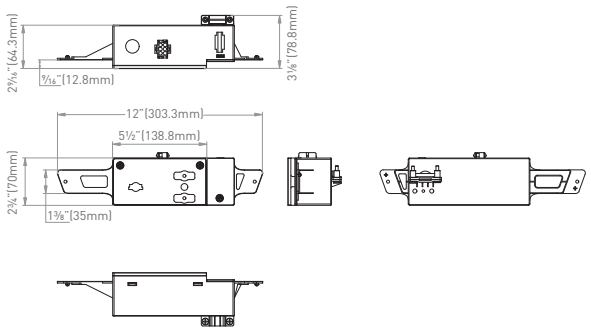

Controller options	
FACC12SA-BL	Single zone controller
FACC12ZA-BL	Multi zone controller
Wall thermostat options	
FACW12SA-BL	Single zone basic wall thermostat
FACW12PA-BL	Single zone premium wall thermostat
FACW12ZA-BL	Multi zone wall thermostat

Note: Controller and wall thermostat are sold separately

Specifications

Air Distribution Box

2 Way Air Outlet	√
LED Lighting	√
Detachable Filter	√
Indoor Sound Pressure Level	60dB

Controller

Input Power	AC 115V / DC 12V
Frequency	60Hz
Compressor & Condenser Fan Relay	AC 115V/20A
3 Evaporator Fan Motor Relay	AC 115V/5A
Temperature Range	60°F to 86°F (16°C to 30°C)

Container Load Information

Air Distribution Box

20' Container Load (pcs)	836
40' Container Load (pcs)	1,704
40'HQ Container Load (pcs)	1,955

Single/Multi Zone Controller

40'HQ Container Load (pcs)	37,240

Dimensions & Weight

Air Distribution Box

Product Dimension (WxHxD)	19.69 x 13.62 x 19.69" (500 x 242.6 x 500mm)
Packaging Dimension (WxHxD)	20.44 x 20.5 x 5.38" (530 x 520 x 135mm)
Net Weight (lbs/kg)	6.7 / 3
Gross Weight (lbs/kg)	7.8 / 3.5

Single/Multi Zone Controller

Product Dimension (WxHxD)	12 x 3.13 x 2.75" (303.3 x 78.8 x 70mm)
Packaging Dimension (WxHxD)	25 x 12.44 x 13.44" (635 x 315 x 340mm)
Net Weight (lbs/kg)	30.9 / 14
Gross Weight (lbs/kg)	33.1 / 15

* Note: "√"=Equipped

Customer Service & Technical Support: Email: support@furrion.com Tel: (888) 354 5792 www.furrion.com

Furrion® and the Furrion logo are trademarks licensed for use by Furrion Ltd. and registered in the U.S. and other countries. © 2007-2020 Furrion Ltd.

MS-FACT12LA-V.1.2

FACC12ZA-BL

Multi Zone Controller for Furrion Chill Air Conditioner System

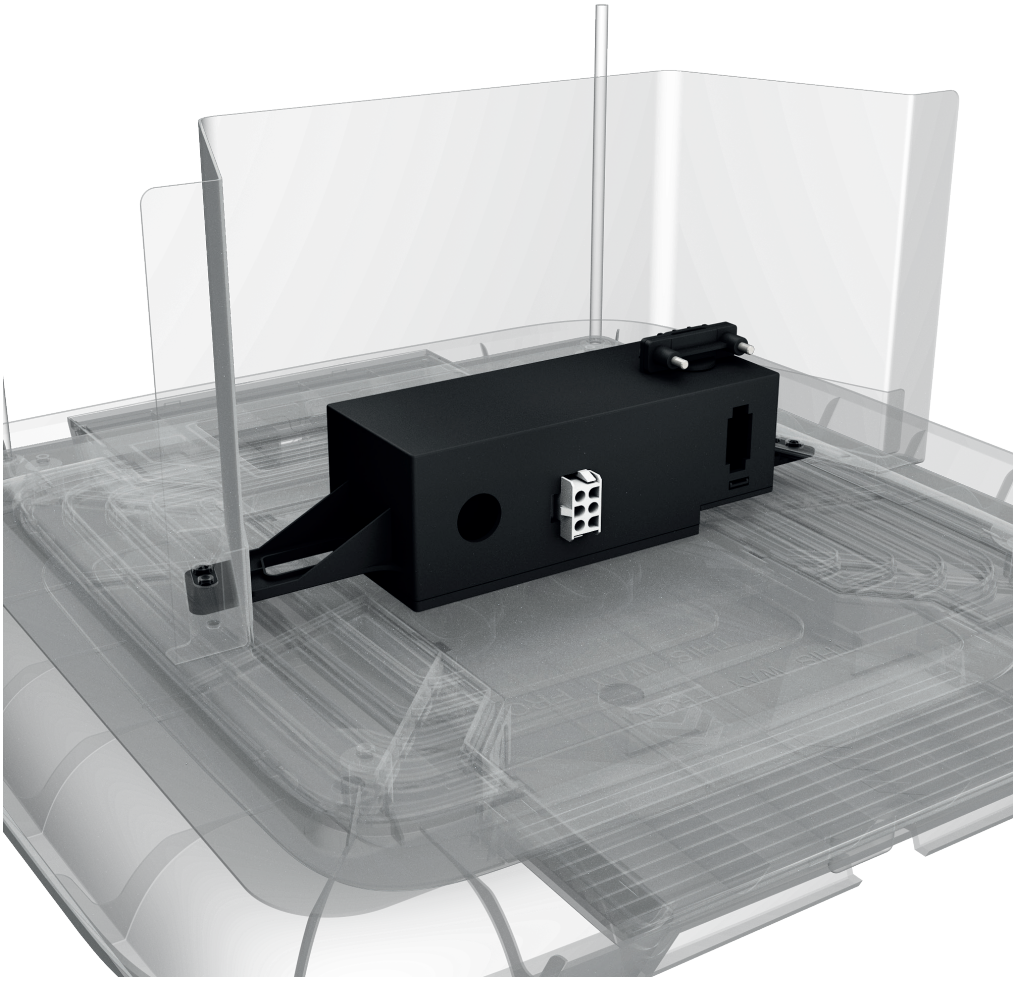

Main Features

- 3 FAN SPEEDS
- AUTO FAN OPERATION
- AUTO RESTART
- SLEEP MODE
- LED LIGHTING
- 2 PROGRAM TIMERS
- EASY INSTALLATION

FURRION

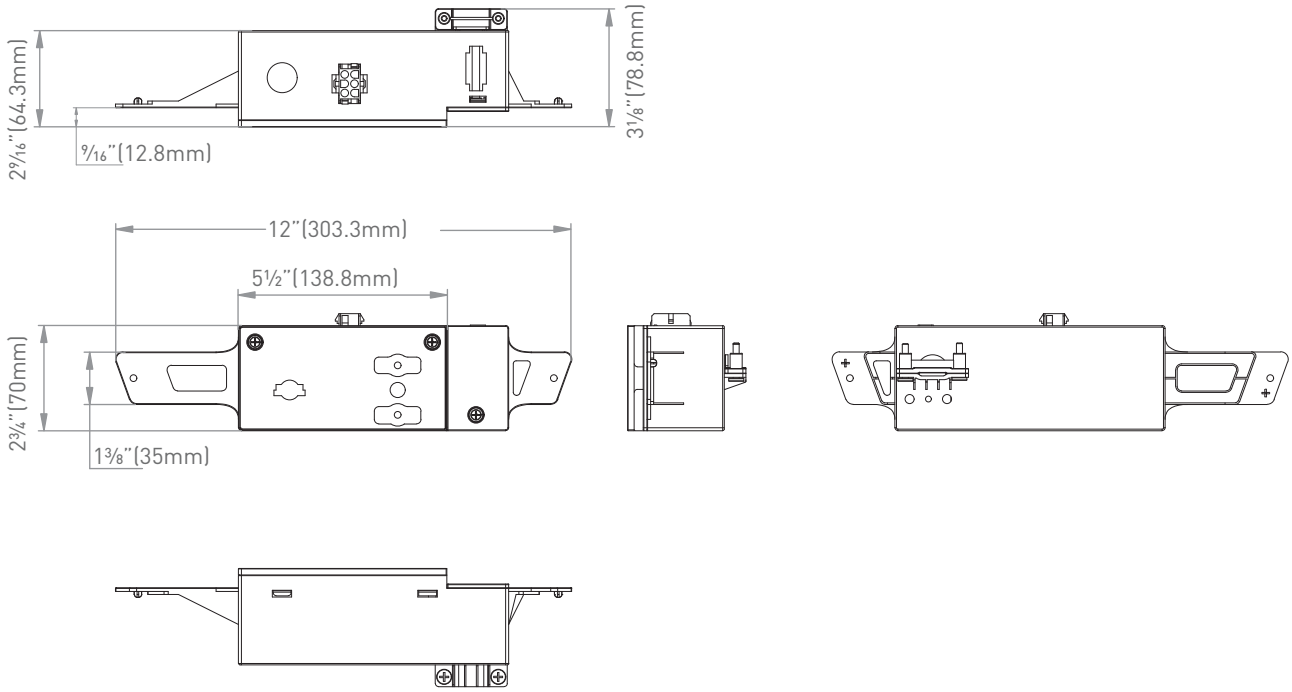

Specifications

Input Power	AC 115V and DC 12V
Frequency	60Hz
Compressor & Condenser Fan	AC 115V/20A
3 Evaporator Fan Motor Relay	AC 115V/5A
Temperature Range	60°F to 86°F (16°C to 30°C)

Features

3 Fan Speeds (High/Med/Low)	√
Auto Fan Speed	√
Memory Function	√
Auto Restart	√
LED Mood Light	√
Sleep Function	√

Dimensions & Weight

Product Dimension (WxHxD)	12 x 3.13 x 2.75" (303.3 x 78.8 x 70mm)
Packaging Dimension	25 x 12.44 x 13.44" (635 x 315 x 340mm)
Net Weight (lbs/kg)	30.9 / 14
Gross Weight (lbs/kg)	33.1 / 15

Container Load Information

40'HQ Container Load (pcs)	37,240

* Note: "√"=Equipped

MS-FACC12ZA-BL-V1.6

Furrion® and the Furrion logo are trademarks licensed for use by Furrion Ltd. and registered in the U.S. and other countries. © 2007-2020 Furrion Ltd.

FACW12PA-BL

Single Zone Premium Wall Thermostat

Main Features

- TEMPERATURE CONTROL
- 3 FAN SPEEDS
- SLEEP MODE
- AUTO FAN OPERATION
- LED LIGHTING
- AUTO RESTART
- DIGITAL LCD DISPLAY

FURRION

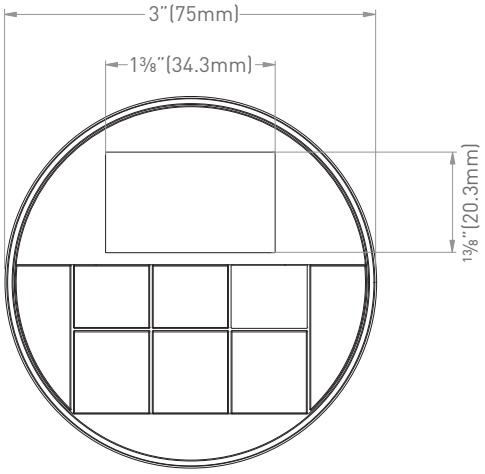

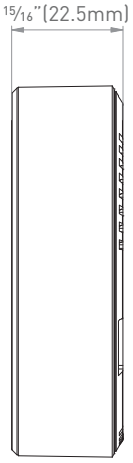

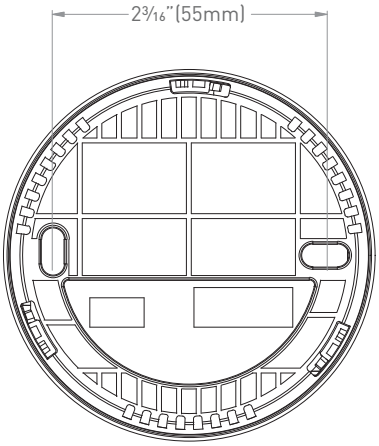

Options	
FACW12SA-BL	Single zone basic wall thermostat
FACW12PA-BL	Single zone premium wall thermostat
FACW12ZA-BL	Multi zone wall thermostat

Specifications

Power Supply	DC 12V
Communication Port	√
Operation Buttons	6
Temperature Range	60°F to 86°F (16°C to 30°C)

Features

3 Fan Speeds (High/Med/Low)	√
Auto Fan Speed	√
Memory Function	√
Auto Reset	√
Sleep Function	√
LED Mood Lighting	√

Dimensions & Weight

Product Dimension (WxHxD)	3 x 0.94 x 3"
	(75 x 22.5 x 75mm)
Packaging Dimension (WxHxD)	16.75 x 11.01 x 16.75"
	(425 x 280 x 425 mm)
Net Weight (lbs/kg)	0.13 / 0.065
Gross Weight (lbs/kg)	0.14 / 0.065

Container Load Information

40'HQ Container Load (pcs)	224,000

* Note: "√"=Equipped

Customer Service & Technical Support: Email: support@furrion.com Tel: (888) 354 5792 www.furrion.com

Furrion® and the Furrion logo are trademarks licensed for use by Furrion Ltd. and registered in the U.S. and other countries. © 2007-2020 Furrion Ltd.

MS-FACW12SA-V.1.2