Hot Food Displays - Curved Glass

W.HFC.xx

Product Information:

- Air insulated tank with double skin stainless steel construction
- All units complete with rear sliding doors on rollers for council compliance
- In-tank temperature probes for accurate measurement and lower running costs
- Multiple element design for reliable operation and even temperature
- Improved infra-red heat lamp configuration for optimum heat & light
- Toughened glass on all sides for maximum safety
- Rectangular base to easily drop in to bench cut-out
- Optimum visibility of product - no unsightly corner post to front
- Mechanical thermostat control with temperature gauge
- Designed to run between 70°C - 80°C
- Takes gastronorm pans up to 100mm deep (sold separately)
- Other pan sizes and combinations available
- Available in a range of sizes from 2-6 modules
- Available in a variety of other profiles, with matching cold food displays
- Wide range of functional accessories available
- **12 months on-site parts and labour warranty**

Note:

- Not recommended for the display of chickens or roast meats
- All Woodson units are designed for use with Woodson pans. Other suppliers pans may fit, however this is not guaranteed.

Specifications:

Model	W.HFC22	W.HFC23	W.HFC24	W.HFC25	W.HFC26
Height	725mm	725mm	725mm	725mm	725mm
Width	705mm	1030mm	1355mm	1680mm	2005mm
Depth	600mm	600mm	600mm	600mm	600mm
Power	1.5kW	2.4kW	3.0kW	3.3kW	3.6kW
	10A plug & lead fitted	10A plug & lead fitted	15A plug & lead fitted	15A plug & lead fitted	15A plug & lead fitted

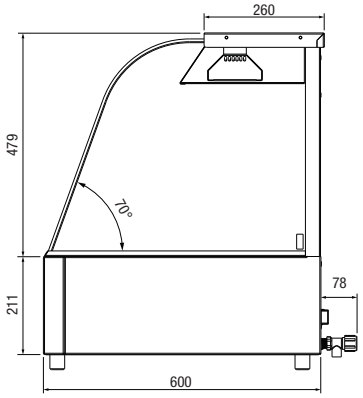

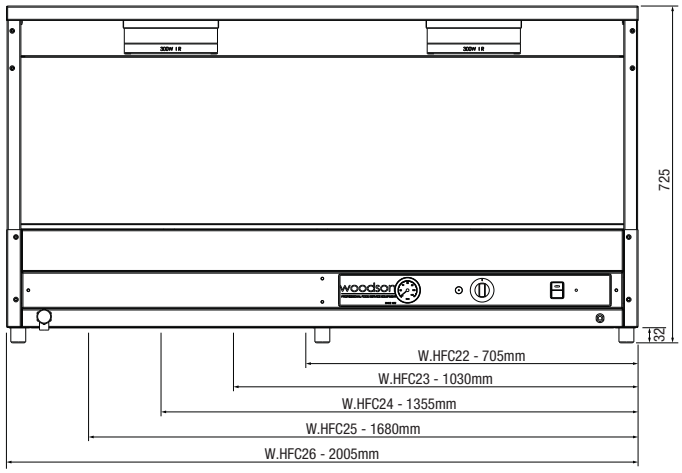

Due to continuous product research and development,
the information contained herein is subject to change without notice.

Revision: 24/06/2020