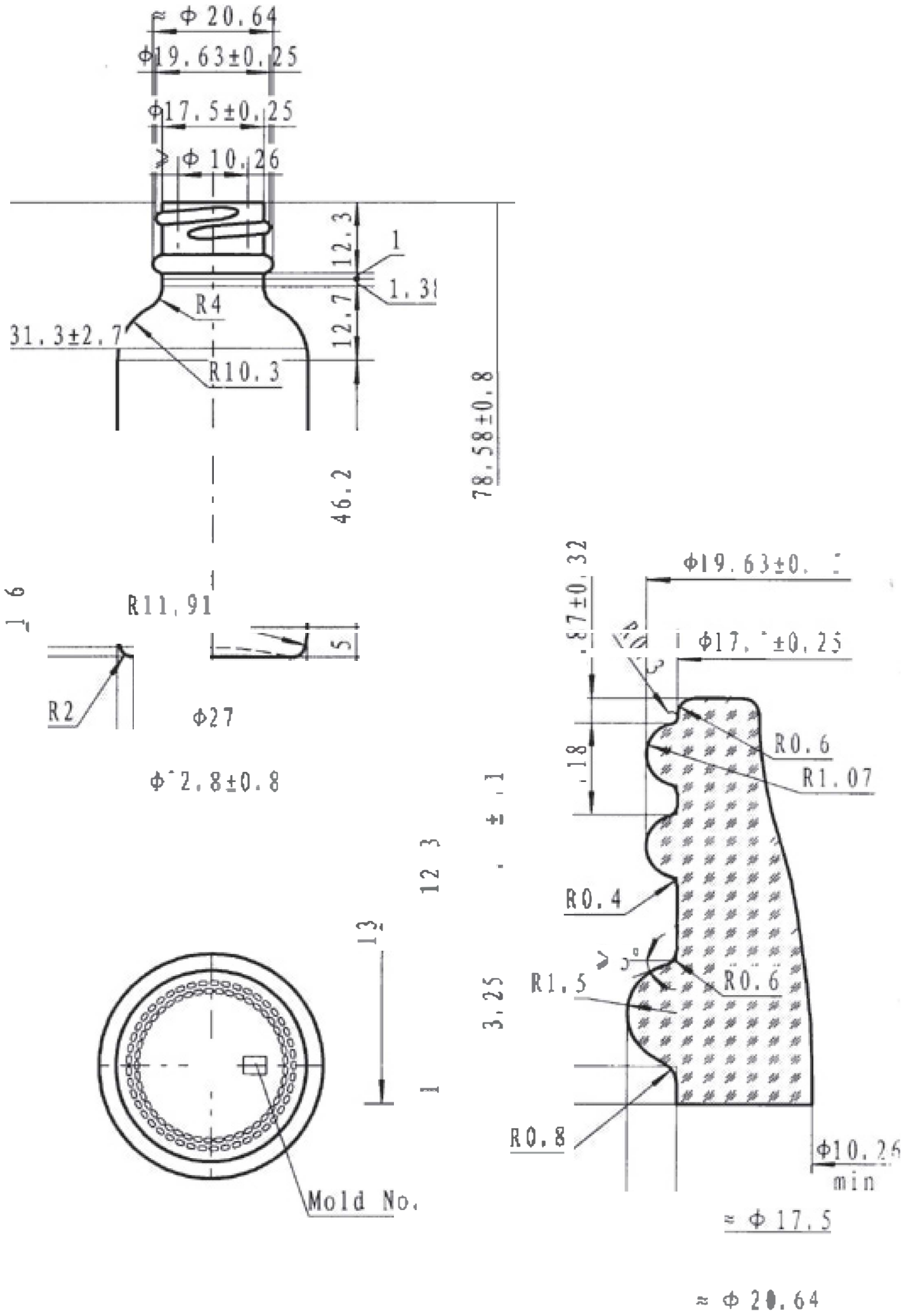

Filling Cap.:	31.3±2.7ml	DES'D by	Date:	REF. NO.: DRG. NO.:	**GB1820** 1 oz
Brimful Cap.:	36.2ml	CHK'D by	Date:	Material	Boston Round Bottle, Type III Made of Soda-lime Silica Glass
Weight:	44±7g	APP'D by	Date:		CITADEL PACKAGING CitadelPackaging.com · 208-550-3393