EDITION	NOTE	NAME/DATE
△		

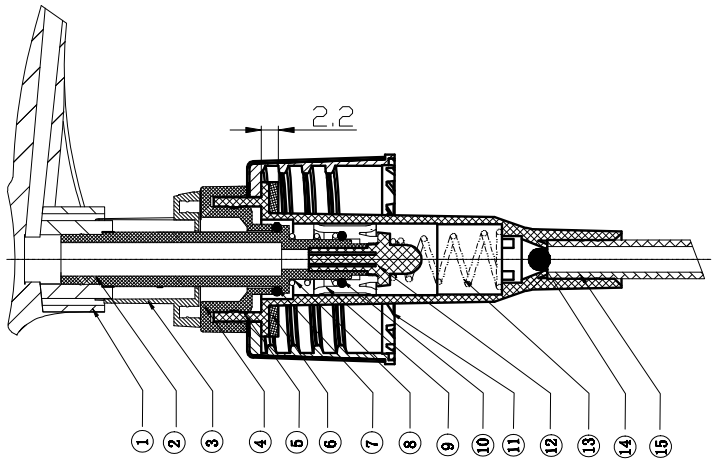

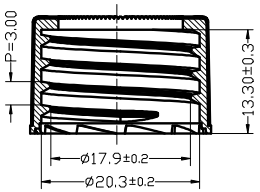

20/410

NUMBER	PRODUCTOR NAME	MATERIAL
15	TUBE	PE
14	BALL VALVE	GLASS
13	SPRING	SUS-304
12	PISTON CASE	POM
11	CLOSURE	PP
10	SEAL	RUBBER
9	PISTON	LDPE
8	SPRING	SUS-304
7	SEAL	RUBBER
6	GASKET	PEL
5	CYLINDER	PP
4	COLLAR	PP
3	CLIP	PP
2	PLUNGER	PP
1	ACTUATOR	PP

PART NAME	LP1170-MD		APPROVE	CHECK	DRAW
		MATERIAL	SCALE	PROJECTION TYPE	THE THIRD ANGLE
	SHEET	DATE	SIZE A4	UNIT mm	

TOLERANCES

0. 0.0 0.00
?.25 ?.1 ?.05

CITADEL PACKAGING
CitadelPackaging.com · 208-550-3393