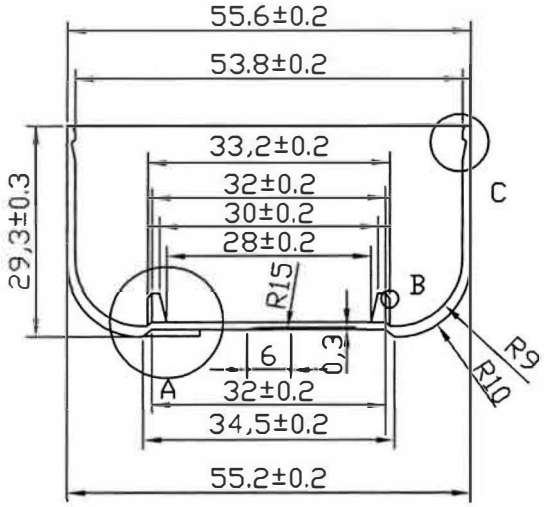


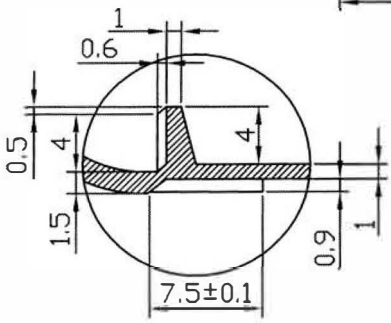


A 2:1

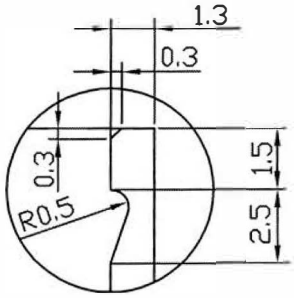


C 5:1

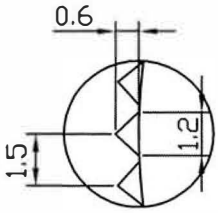


D 5:1

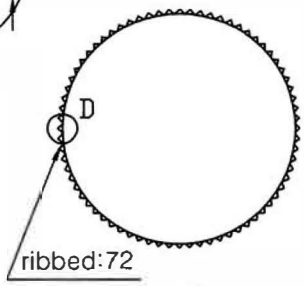


B

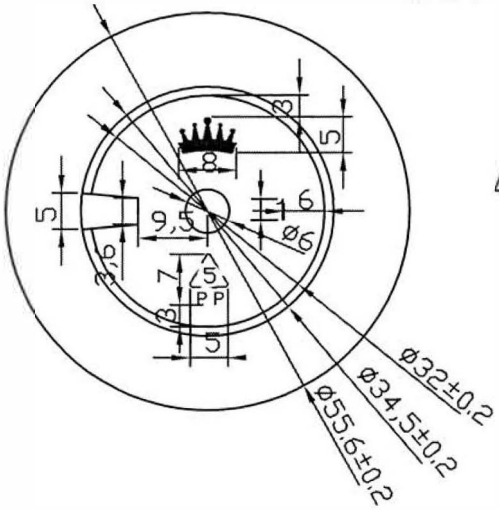


| | | | | | | |
|---|---|---|---|---|---|---|
| Non. Capacity | | Drawn | Date 2010.10.29 | Drawing Name | PJ1430-MD | Scale |
| Bf. Capacity | | Checked | Date | Material | PP | 1: 1 |
| Weight | 7.8±0.5g | Finish | 53/400 | CITADEL PACKAGING citadelpackaging.com · 208-550-3393 | | |

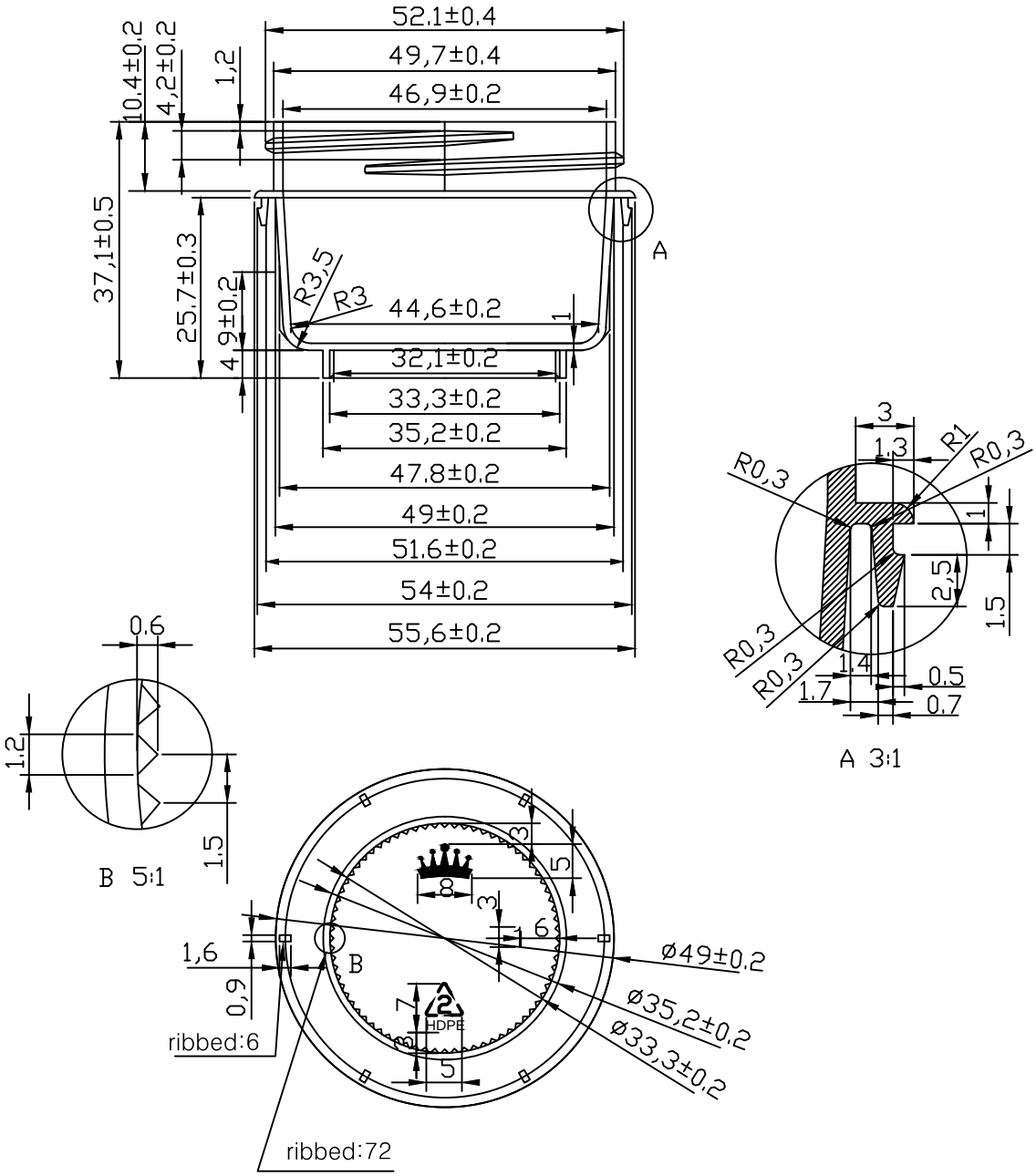


| | | | | | | |
|---|---|---|---|---|---|---|
| Nom. Capacity | | Drawn | Date 2010.10.29 | Drawing Name | PJ1430-MD | Scale |
| D.F. Capacity | 52±5ml | Checked | Date | Material | HDPE | 1: 1 |
| Weight | 8.4±0.5g | Approved | Date | CITADEL PACKAGING CitadelPackaging.com · 208-550-3393 | | |