MARK	REVISER	DESCRIRTN	DATE

K

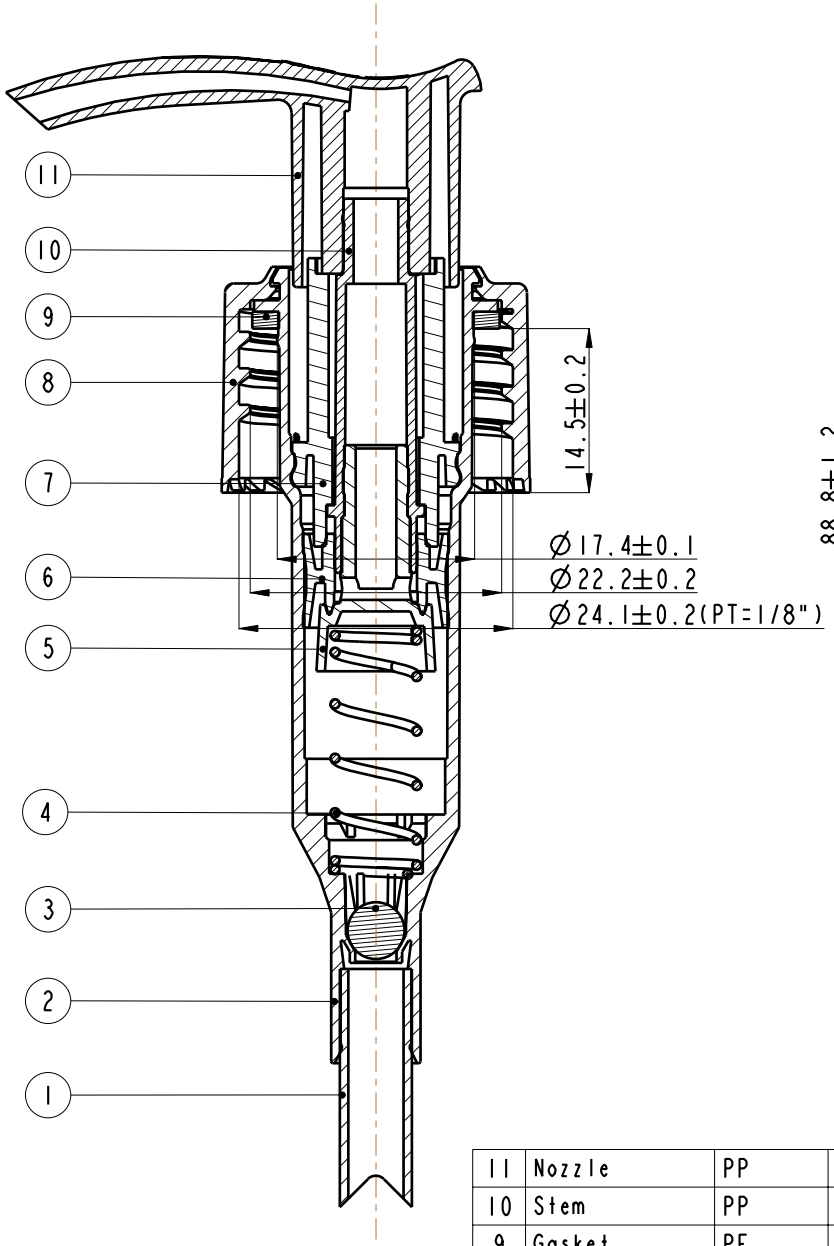

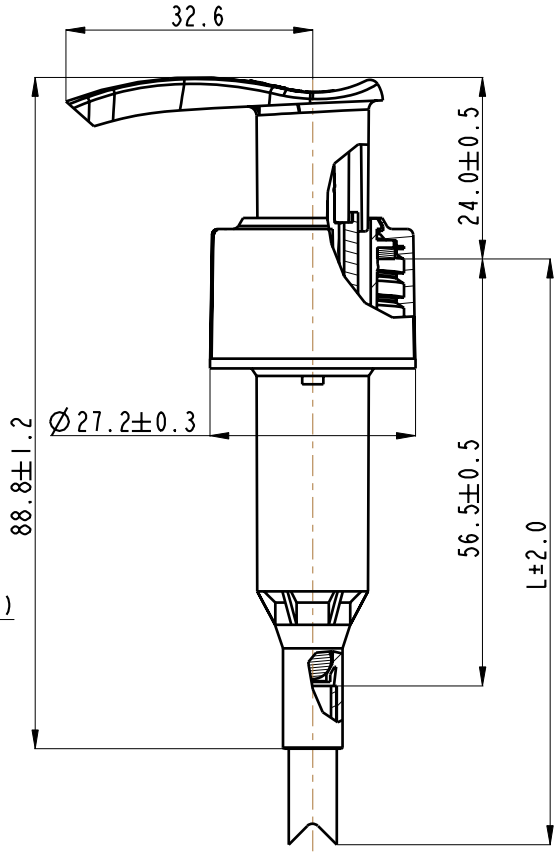

Scale 1:1

No.	Component	Material	Specification	Part No.	QTY	Remark
11	Nozzle	PP	Color for order form	SLM302-08A1	1	
10	Stem	PP	Color for order form	SLM302-04A1	1	
9	Gasket	PE	Ø24*1.5MM	SLM302-98B1	1	
8	Closure	PP	Ø24/410	SLM302-05C1	1	
7	Connect	PP	Natural	SLM302-06A1	1	
6	Piston	LDPE	Natural	SLM302-03A1	1	
5	Cone	HDPE	Natural	SLM302-17A1	1	
4	Spring	304H	Ø0.8*30L*9circle	SLM302-96A1	1	
3	Glass Ball	Glass	Ø5.0MM	SLM301-97A1	1	
2	Housing	PP	Ø24	SLM302-01B1	1	
1	Dip Tube	LDPE	Ø6.35*0.75thickness	SLM302-95A1	1	

TOLERANCE			◯
0mm-15mm	±0.05	±0.10	±0.50
15mm-30mm	±0.05	±0.15	±1.00
30mm-50mm	±0.10	±0.20	±1.50
50mm-99mm	±0.15	±0.30	±2.00
ABOVE 99mm	±0.20	±0.40	±2.50
CENTER	±0.10	±0.50	±1.00
ANGLER	±0.25°	±0.50°	±2.00°

APPROVED:

CENSOR:

CHECKED:

DRAFTER: 2010/06/14

UNIT: mm

CITADEL PACKAGING
CitadelPackaging.com · 208-550-3393

MODEL NAME:

TITLE: 24/410 Assemble

SCALE: 3:2

VISUAL ANGLE

Q'TY: 1/1

REV: A0

PART NO. LP1900-MD

FILE NO.