megamaster®

VENTURE SERIES

4-IN-1 PIZZA OVEN

ASSEMBLY & OPERATING INSTRUCTIONS

MODEL CODE: 820-0264C

CONTENTS

03 Braai Usage Info

04 Warnings

05 Tools Needed

06 Hardware Pack List

06 Package Part List

07 Part Diagram

08 Spare Parts List

09 Assembly Instructions

13 LP Gas Supply Safety

14 Gas Hook-up Instructions

15 Leak Test

16 Ignition Instructions

17 Burner Replacement

18 Care & Maintenance

18 Troubleshoot Guide

19 Warranty

BRAAI

PRONOUNCED: B - R - Y - E

A **braai** isn't just about cooking meat; it's about cooking up **memories** that last a **lifetime**, it's practically an **art** form, a **celebration**, and a way of life! Every flame flickering on the grid is a spark of **laughter**, of **stories** shared, of **friendships** built and strengthened over sizzling boerewors and juicy steaks.

CONTACT INFO

CUSTOMER SERVICE DEPARTMENT

Tel: +27 (12) 802 1515, CAT
Email: info@megamaster.co.za
Website: www.megamaster.co.za

BRAAI USAGE INFO

Never use your gas braai in enclosed areas like garages, sheds, or any other enclosed areas.

Do not use / install appliance under overhead combustile surfaces / combustile areas.

The minimum air space clearance to combustible construction is 91 cm from both the sides and back of the unit.

Do not operate this appliance within 3 m of any structure, combustible material, or other LP gas cylinder.

Do not operate this appliance within 7.5 m of any flammable substance.

This braai is not intended for installation in recreational vehicles or boats.

For outdoor use only.

READ THE MANUAL CAREFULLY BEFORE COMPLETING YOUR BRAAI

WARNING!

VERY HOT BRAAI

DON'T TOUCH ANY BRAAI PART WHILE IN OPERATION

WAIT TILL GAS HAS COOLED DOWN BEFORE TOUCHING

FAILURE TO COMPLY WITH INSTRUCTIONS MAY RESULT IN INJURY OR DEATH.

DO NOT LEAVE THE BRAAI UNATTENDED, WHEN IN USE.

OPERATIONAL WARNINGS

	AIRFLOW: Do not obstruct the air vents or combustion flow
	BURNER MAINTENANCE: Keep burner ports clean and ensure proper mounting for safe operation.
	CHILDREN & PETS: Never leave children or pets unattended near the braai. Keep them away from the appliance at all times. Keep items that may interest children away from the braai.
	CLOTHING: Avoid loose garments or synthetic fabrics that may catch fire.
	FLAMMABLE MATERIALS: Avoid contact between clothing, pot holders, or flammable materials and hot surfaces until the braai has cooled.
	FOOD CONTAINERS: Never heat unopened food containers on the braai. They could burst from pressure.
	GREASE: Let grease cool before handling. Clean grease tray after each use to prevent buildup.
	LIGHTNING THE BURNER: Be mindful of which burner you light and keep your body clear of open flames.
	PERFORMANCE: Optimum performance without the use of briquettes, charcoal or wood. Using them can block vents, damage components, and void the warranty.
	PROTECTIVE GEAR: Wear protective gear when opening the braai lid. Never lean over an open braai. Only use dry protective gloves: avoid towels.
	REPAIRS & SERVICES: Only repair or replace parts as specified in the manual. For other services, contact a qualified technician.
	SUITABLE COOKWARE: Use only approved glass, ceramic, or glazed utensils. Follow manufacturer guidelines for temperature settings.

SPIDER WARNINGS

CAUTION: Beware of Burn-Back

Spiders and insects may create webs in the braai burner tubes during transit, obstructing gas flow and causing a dangerous "BURN-BACK" fire. While not the only cause, an obstructed burner tube is the most common. This can damage your braai and create unsafe conditions.

Step-by-Step Guide for Handling "BURN-BACK":

1. Immediately **turn off** gas supply.
2. Ensure that the flame is completely **extinguished.**
3. Re-light the appliance.
4. If **"BURN-BACK"** happens again, proceed to the next step.
5. Close the valves and **examine** the mixing tube or burner for any blockages.
6. Contact a qualified technician for inspection and repairs if back-burns still occurs.
7. Do not make any adjustments to the braai; *only a qualified LP gas technician should perform adjustments.*

Step-by-Step Guide to Prevent "BURN-BACK":

1. Clean burner tubes **before** assembly.
2. Schedule a cleaning of the burner tubes at least once a month.
3. If your braai hasn't been used for a while, perform the burner tube cleaning **procedure**.
4. Regularly **inspect** and ensure that the tubes are free of clogs to prevent **fire hazards** beneath the braai.

PRODUCT SPECS

Dimensions: 58.6 cm (L) x 50.6 cm (W) x 46.1cm (H)

Primary Cooking Area: 1 741.93 cm^2

Material: Steel

Weight: 22.5 kg

Heat Output: 19 000 BTU's

TIME TO ASSEMBLE & FIRE UP THE BRAAI

TOOLS NEEDED

Some parts have preinstalled screws. Loosen and tighten for final assembly.

HARDWARE PACK LIST

A x 16	B x 6				
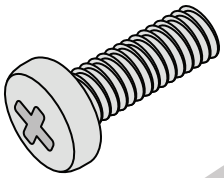	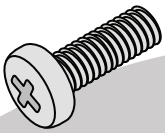				
Truss Head Screw W1/4-20 x 1/2”	Truss Head Screw (Black) W5/32-32 x 25/64”				

PARTS LIST

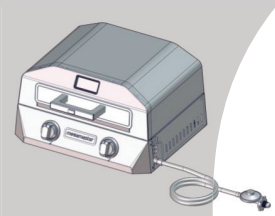 1. Main Lid - control panel	 2. Leg front, left	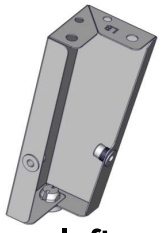 3. Leg rear, left
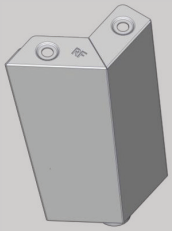 4. Leg front, right	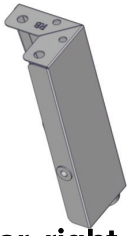 5. Leg rear, right	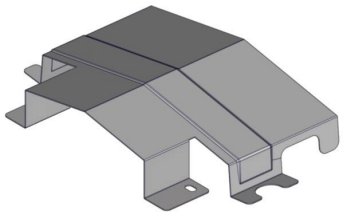 6. Grease box heat shield
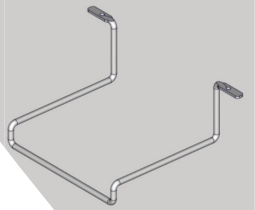 7. Grease box bracket	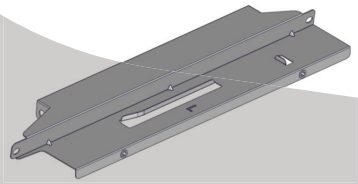 8. Griddle bracket, left	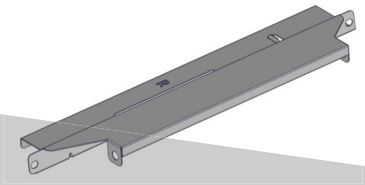 9. Griddle bracket, right
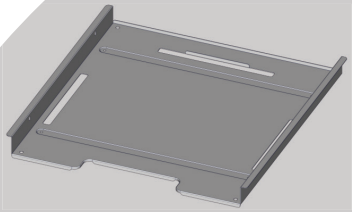 10. Pizza stone storage tray	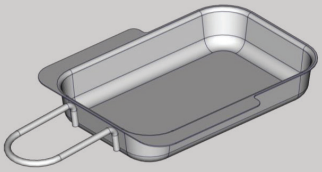 11. Grease box assembly	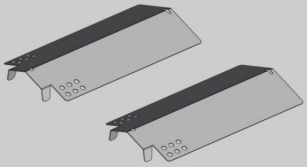 x2 12. Flame tamer

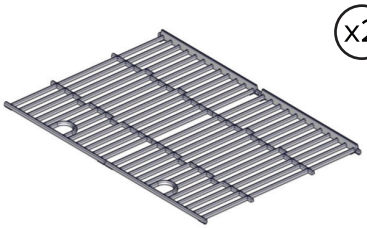

13. Cooking grid

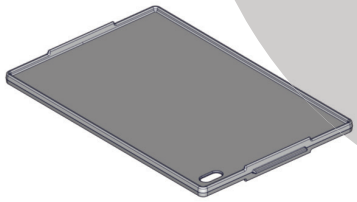

14. Cooking griddle

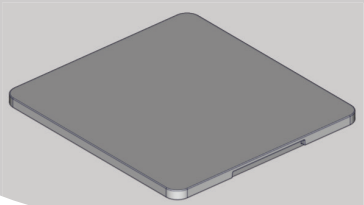

15. Pizza stone

PART DIAGRAM

SPARE PARTS LIST

No.	Part (Description)	Warranty coverage (Year)	QTY	No.	Part (Description)	Warranty coverage (Year)	QTY
1	Main lid		1				
2	R Pin		6				
3	Pizza door screw		2				
4	Hood buffer		2				
5	Pizza door assembly		1				
6	Lid hinge		2				
7	Temperature gauge		1				
8	Firebox hinge		2				
9	Main lid screw		2				
10	Grease box heat shield		1				
11	Grease box assembly		1				
12	Grease box bracket		1				
13	Cooking grid		2				
14	Flame tamer		2				
15	Griddle bracket, Left		1				
16	Pizza stone storage tray		1				
17	Griddle bracket, Right		1				
18	Cooking griddle		1				
19	Pizza stone		1				
20	Main gas valve		2				
21	Main manifold assembly		1				
22	LP regulator with hose		1				
23	Left front leg		1				
24	Left back leg		1				
25	Right front leg		1				
26	Right back leg		1				
27	Control knob		2				
28	Control knob seat		2				
29	Control panel		1				
30	Firebox assembly		1				
31	Igniter wire		2				
32	Main burners		2				

ASSEMBLY STEPS

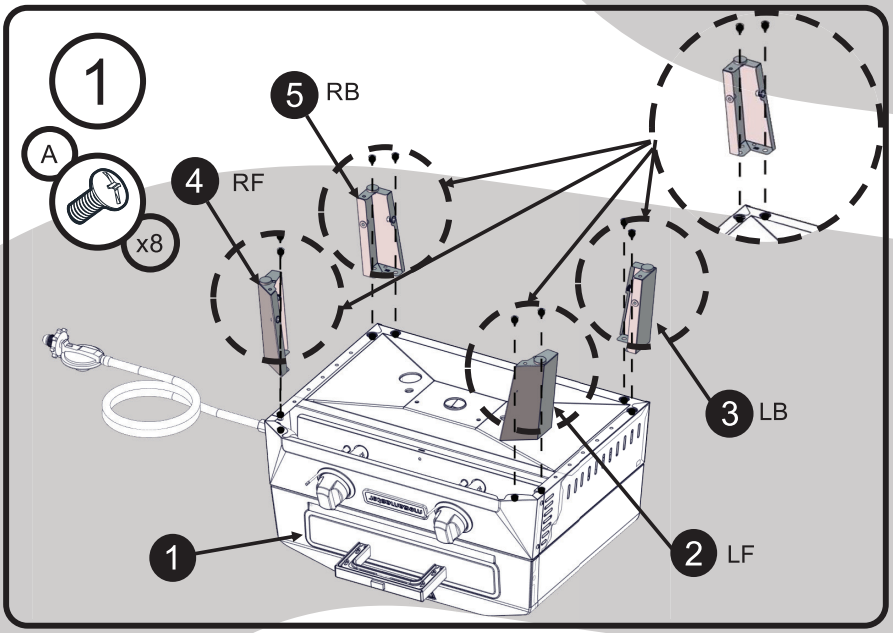

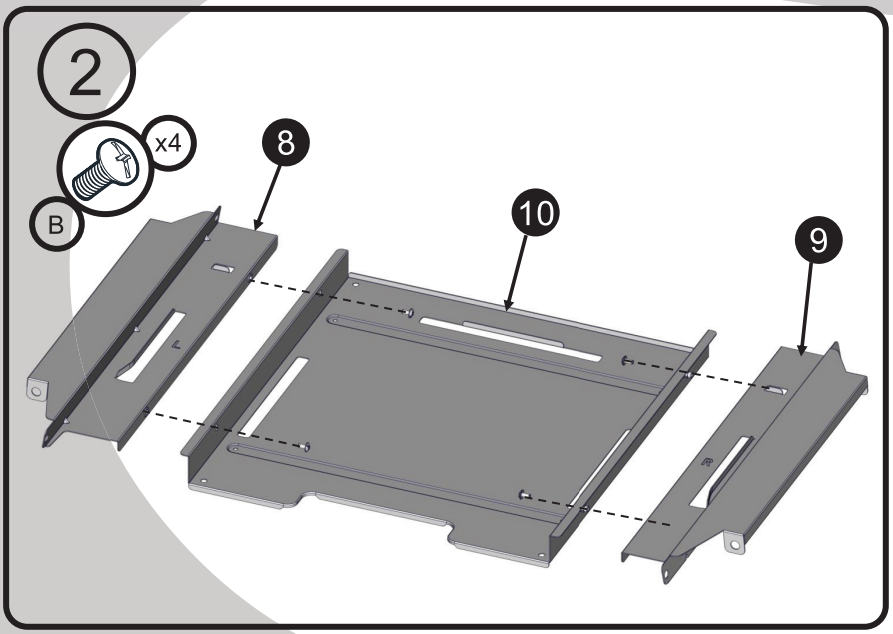

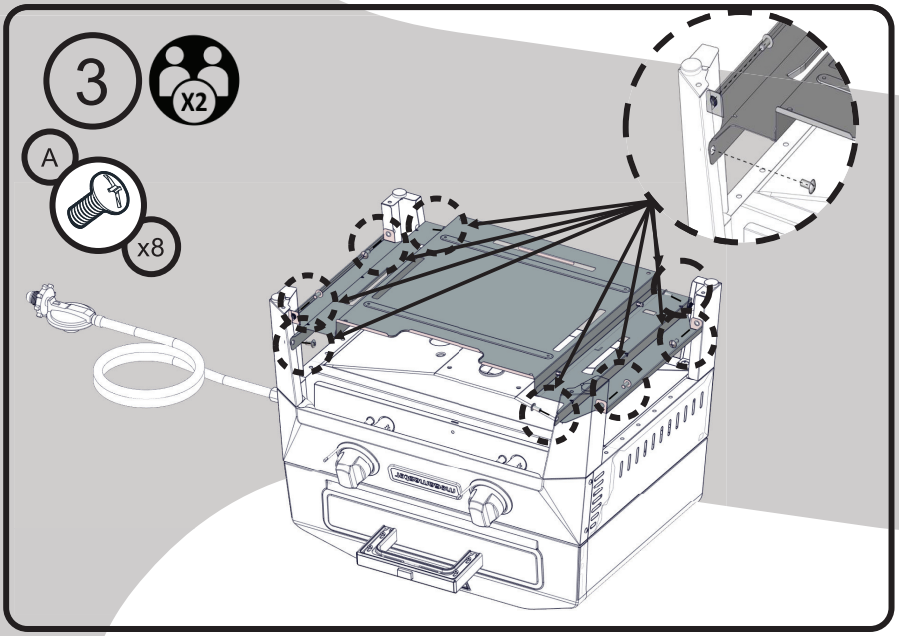

ASSEMBLY STEPS

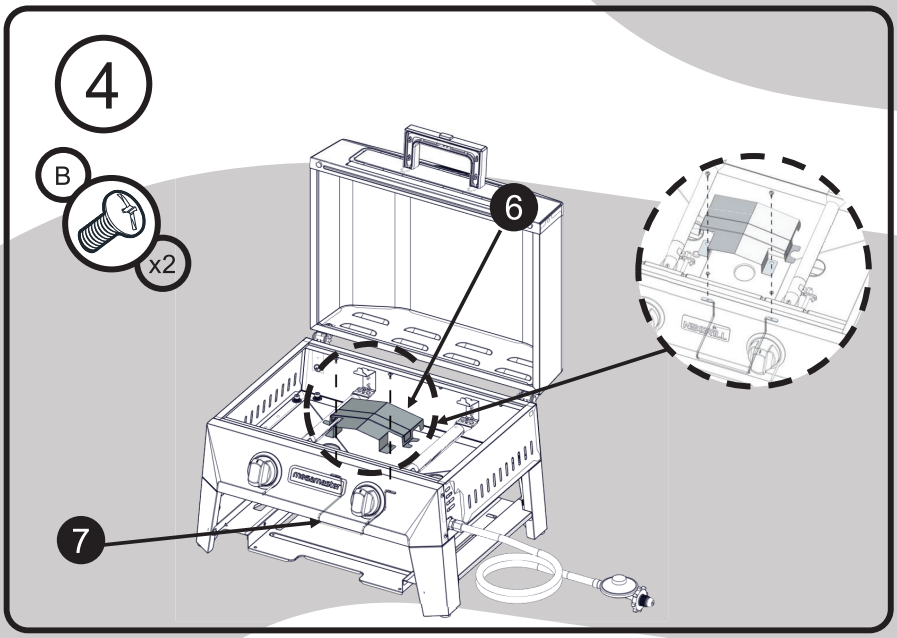

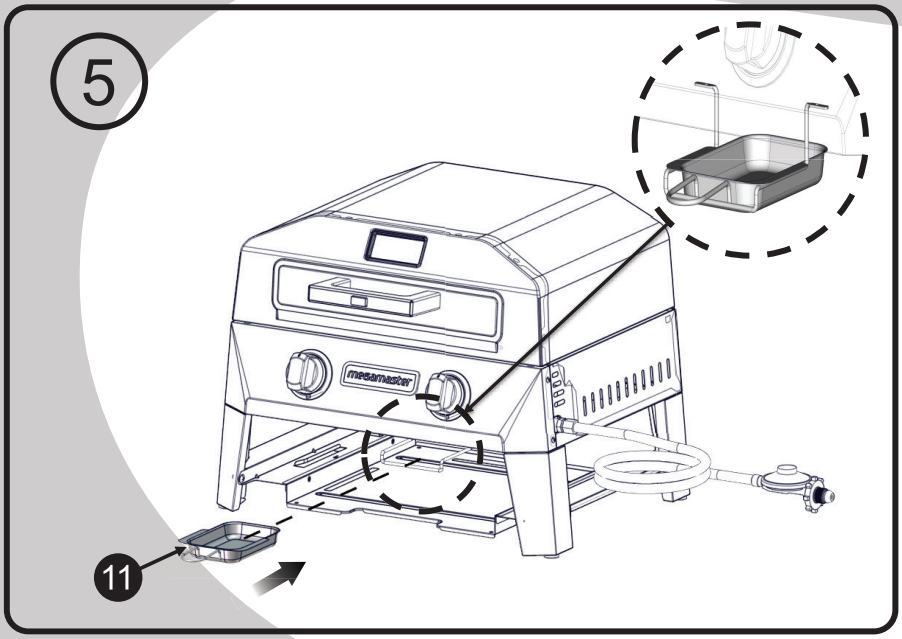

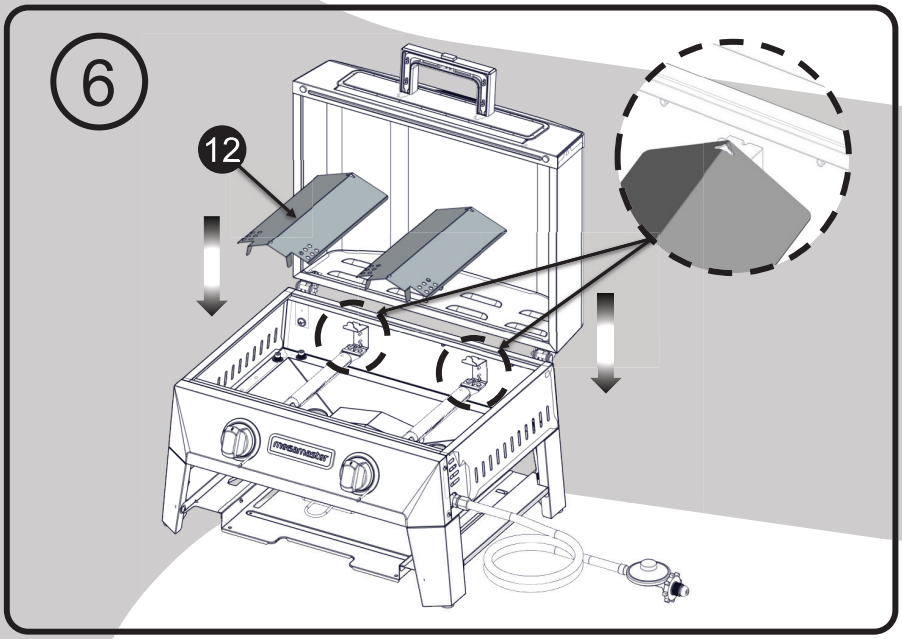

ASSEMBLY STEPS

7

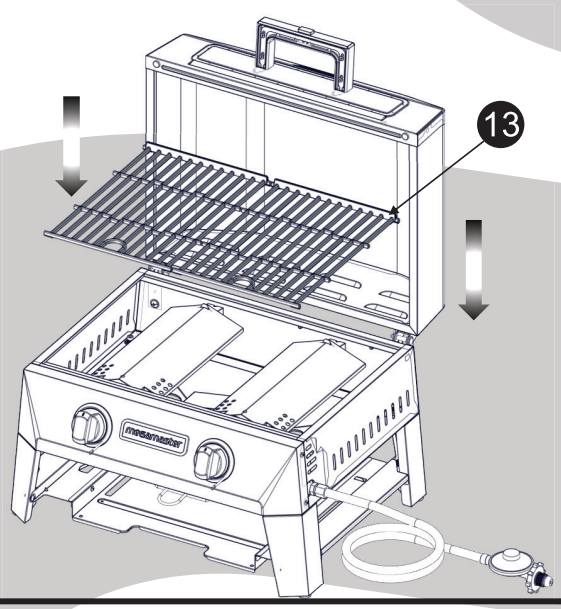

8

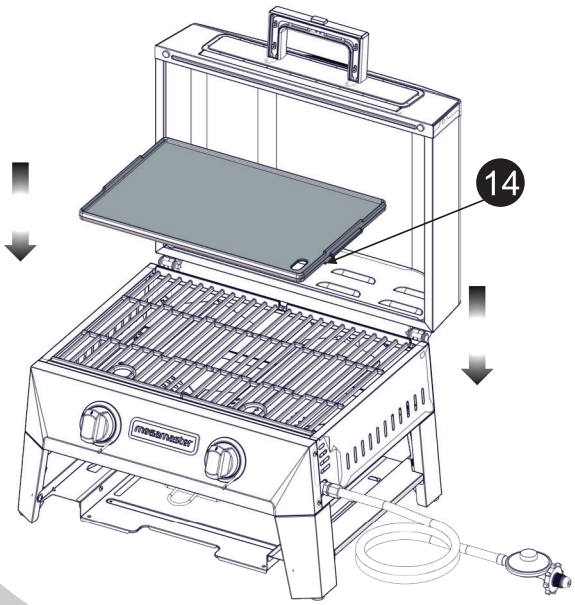

9

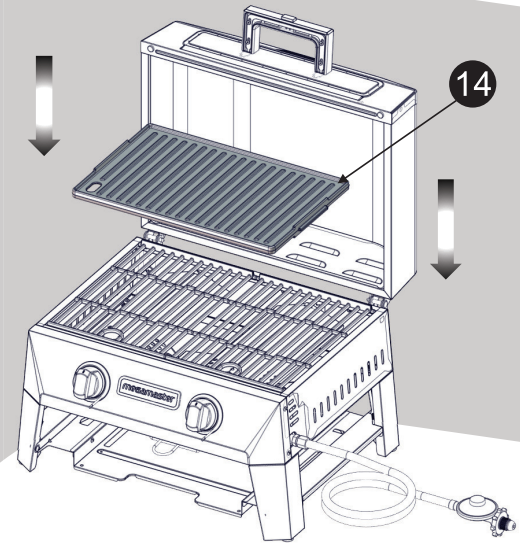

ASSEMBLY STEPS

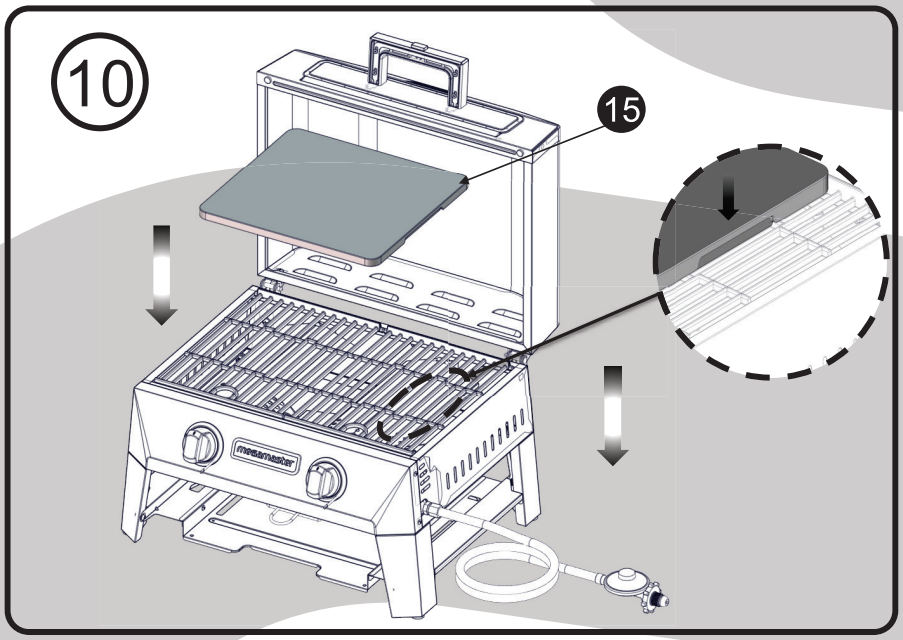

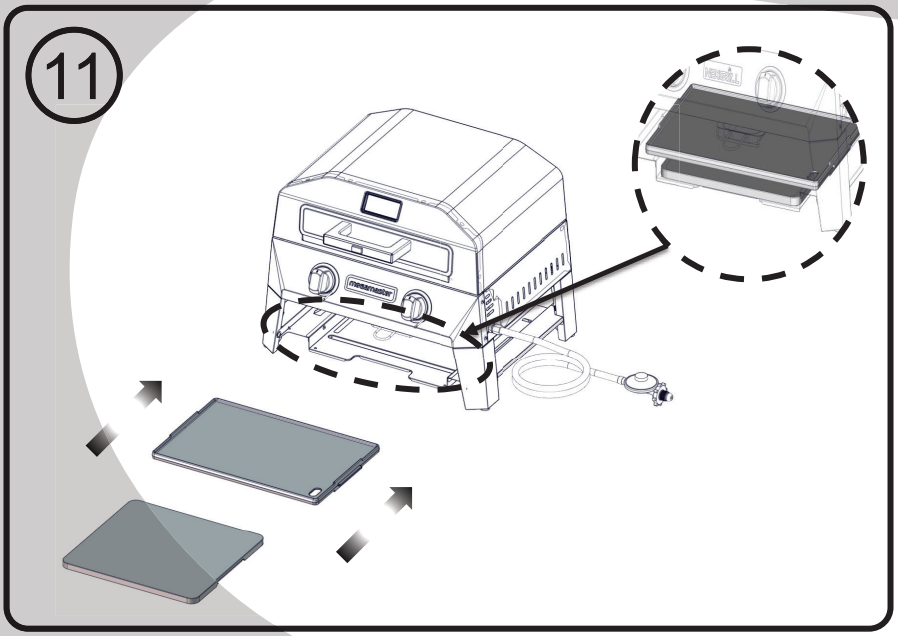

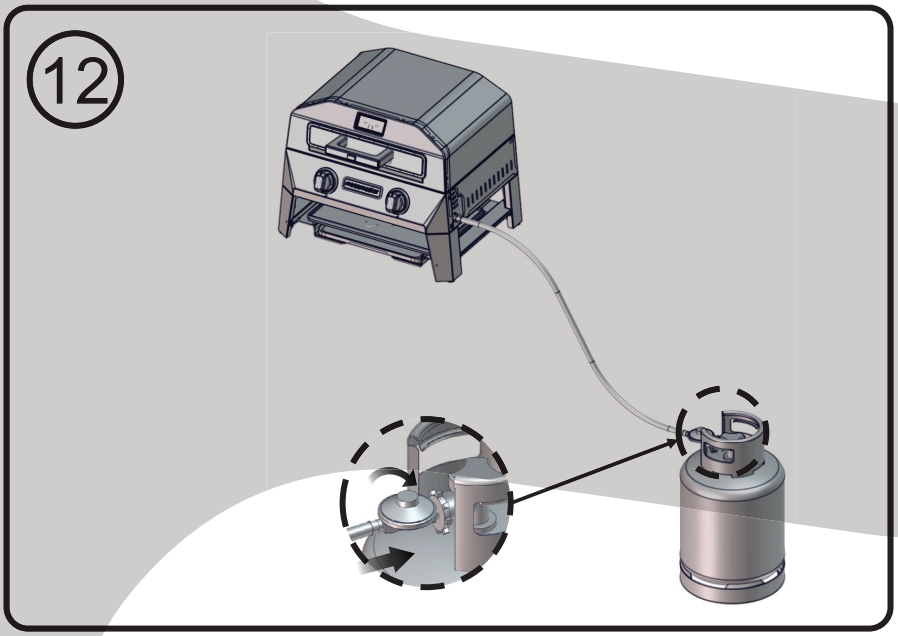

LP GAS SUPPLY SAFETY

Important: Read these instructions for use carefully so as to familiarize yourself with the appliance before connecting it to its gas container. Keep these instructions for future reference. This is an LP gas braai. Do not use natural gas unless the braai is reconfigured for it.

1. Follow instructions precisely to avoid fire or injury.
2. Cylinder size: 9kg. **Not included with braai.** Never connect your gas braai to an LP gas cylinder that exceeds**.**
3. Cylinder must be LP Gas certified (RSA standards).
4. This appliance includes a pressure regulator that meets South Africa's National Standards 1237 for LP gas products.
5. Use only cylinders with a shut-off valve that is compatible with a Type 1 and QCC1. Gas cylinder must be fitted with a Overfill Protection Device (OPD) and QCCI connection on the cylinder valve.
6. Ensure cylinder has a safety relief device with a direct connection to vapour withdrawal and has a collar to protect the valve. Never use a cylinder with a damaged valve.
7. Always use the supplied dust cap when not in use. Only use the dust cap provided with the cylinder valve; other caps may cause gas leakage.
8. Never connect unregulated cylinders.
9. Use only high-capacity hose/regulator assembly supplied with your gas braai or for connecting to a standard 9kg LP gas cylinder. Never substitute other types of regulators, contact customer service for manufacturer specified replacement parts.
10. Store cylinders outdoors in a ventilated, child- and pet-free area, in an upright position. Indoors is allowed ONLY when cylinder is disconnected and removed from gas appliance.
11. Never store or use flammable liquids near the appliance.
12. Turn off gas supply when not in use.
13. Never fill the cylinder beyond 80 percent full. Get your cylinder filled by a reputable dealer and inspected regularly.
14. Inspect hose/regulator before each use and replace prior to braai being operated if damaged.
15. Use only specified replacement parts.
16. Do not use in windy conditions without wind shield.
17. Never use a dented or rusty cylinder.
18. Stay clear when igniting the braai.
19. Keep a spray bottle of soapy water near the gas supply valve and check the connections before each use.

Note: A humming noise from the gas flow is normal. If it's loud, purge air from the gas line or reset the regulator's excess flow device. Purge every time a new cylinder is connected.

WARNING!

IF YOU SMELL GAS:

- **Turn off gas supply at bottle.**
- **Extinguish all naked flames.**
- **Do not operate any electrical appliances.**
- **Ventilate the area.**
- **Check for leaks as detailed in this manual.**

If odour persists, contact your dealer or gas supplier immediately.

Do not tamper or modify the appliance.

GAS HOOKUP INSTRUCTIONS

Check your local building codes for the proper method of installation. In the absence of local codes, this unit should be installed in accordance with the South African National Standard 1539, Storage and Handling of Liquefied Petroleum Gases, Correct LP Gas Cylinder Use.

Ensure the black plastic grommets or washers are in place on the LP gas cylinder valve, and that the hose does not touch the grease tray or braai head. Your braai is designed for LP gas and includes a hose/regulator for connecting to a standard 9kg LP gas cylinder (52cm high, 30cm diameter). Follow these steps to connect the cylinder:

Connecting L.P. Gas Cylinder

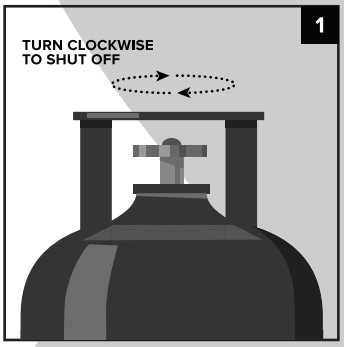

Ensure the cylinder valve is fully off.

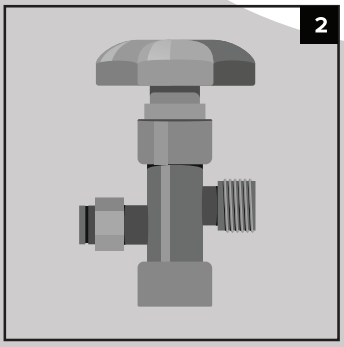

Check the cylinder valve for proper internal female threads.

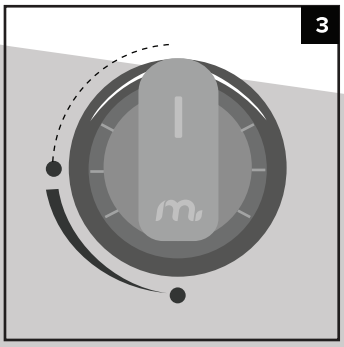

Ensure all burner valves are off.

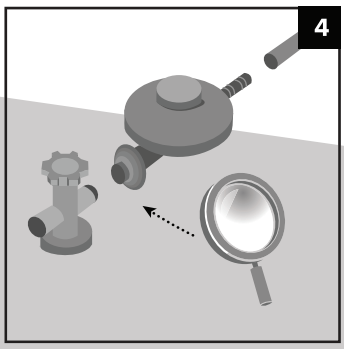

Inspect valve connections, ports, regulator, and hose for damage or debris. Remove debris and avoid using damaged equipment. Contact a local LP gas dealer for repairs.

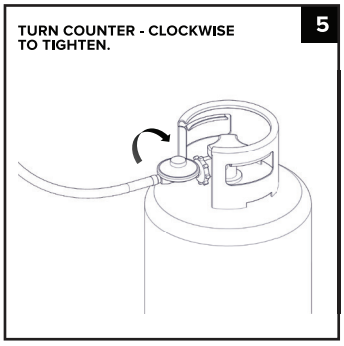

Hand tighten the regulator assembly connection to the valve (counter-clockwise) until it stops. Do not use a wrench.

Open the cylinder valve fully (counter-clockwise). Apply a soap solution to all gas connections. If bubbles appear, the connection is not sealed. Tighten or repair as needed.

If there's a gas leak you cannot fix, do not use or move cylinder. Turn off the gas at the cylinder, disconnect the fuel line, and contact your gas supplier for repair. For severe leaks or fire, call the fire department.

Disconnecting L.P. Gas Cylinder

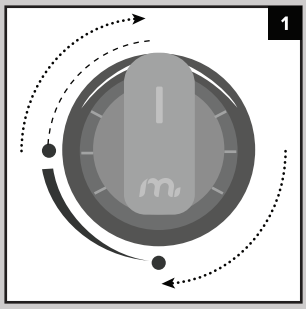

Turn the knobs off (clockwise) to ensure the burner valves are off.

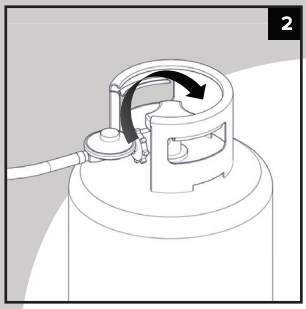

Turn off cylinder.

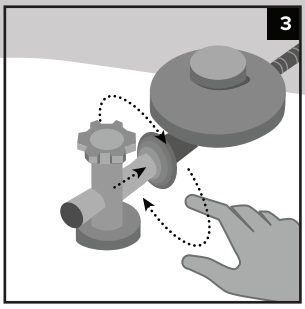

Turn the wheel clockwise to detach the regulator assembly from the cylinder valve.

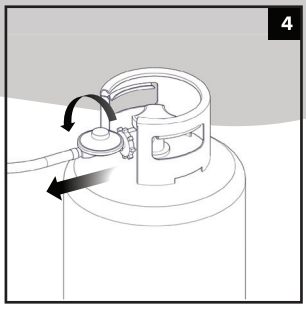

Remove regulator.

LEAK TEST INSTRUCTIONS

Although the braai's gas connections are leak-tested at the factory, however, variations in the local gas supply may make it necessary to adjust the burners. Perform a gas tightness check on your burners after assembly to ensure there are no gas leaks. Periodically check for leaks, and if you smell gas, immediately inspect the system.

Total gas consumption (per hour) with all burners on "HIGH":

TOTAL OUTPUT
19 000 Btu/hr

BEFORE TESTING

1. Remove all packing materials, including tie-down straps.
2. Do not smoke while testing and never use an open flame during the leak test.
3. Prepare a soap solution with equal parts liquid detergent and water.
4. Ensure the LP gas cylinder is 80% full for the initial test.

TESTING

1. Set control valves to "OFF" position, then turn on the gas supply.
2. Check all connections using the soap solution. Bubbles indicate leaks.
3. Only use parts recommended by the manufacturer. Substitutions will void the warranty.
4. Do not use the braai until all connections are leak-free.

GAS FLOW CHECK

1. Check flame: it should be blue, stable, and free of yellow tips or excessive noise.
2. If there are issues, check for blockages (dirt, debris, spider webs) in the air shutter or burner ports.
3. For flame stability concerns, contact customer care.

ADDITIONAL TIPS

1. Check fittings for leaks before each use.
2. Only use the dust cap provided with the cylinder valve.
3. Other types of caps or plugs may cause LP gas leaks.
4. If stored indoors, disconnect and remove the cylinder from the appliance.

BLUE FLAME

YELLOW FLAME
(INSUFFICIENT AIR)

NOISY FLAME
(EXCESSIVE OXYGEN)

ASSEMBLY CHECKLIST

- ☐ Minimum 91 cm from sides and back to combustible materials.
- ☐ All internal packaging removed.
- ☐ Knobs turn freely.
- ☐ Burners secure and properly positioned on orifices.
- ☐ Pressure regulator connected and set with hose & regulator for 9kg LP gas cylinder.
- ☐ Unit tested and leak-free.
- ☐ User informed of gas shut-off valve location.
- ☐ All packaging, including straps, removed before use.

BRAAI IGNITION

NOTE: This braai unit cooks efficiently without lava rocks or briquettes, using stainless steel flame tamers above each burner to radiate heat.

KNOB OPERATION:

1. Open the lid.
2. Ensure all knobs are in the "**OFF**" position, then turn the LP cylinder valve "ON."
3. Push and turn the main burner knob to **IGNITE/HIGH** or **IGNITE/ON** while holding it to light the burner.
4. Release the knob once the burner is lit.
5. If it doesn't ignite in 5 seconds, turn the knob "OFF", wait 5 minutes, and retry.

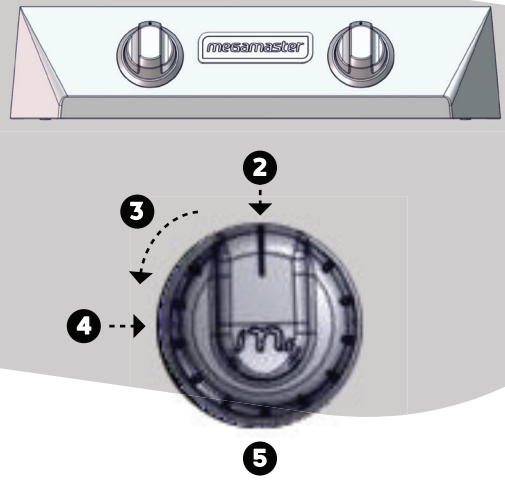

Note: Burners are pre-adjusted, but local gas supply variations may require minor adjustments. Use a star screwdriver to adjust the oxygen setting via the screw near the burner orifice until the flame quality is acceptable.

MAIN BURNER REPLACEMENT

WARNING!

For main burner replacement, we recommend hiring a professional technician. We are not responsible for any liability, injury, or damage from improper burner assembly.

HOW TO REPLACE THE MAIN BURNER:

1. Use needle nose pliers to remove the main burner "R" pin on the firebox back wall. Then, use a flathead screwdriver to remove the burner pin cover and take out the burner.

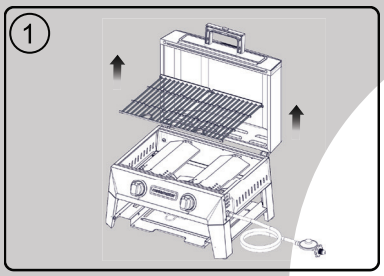

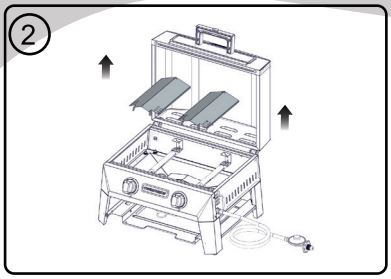

2. Insert the burner onto the orifice, ensuring the burner hole aligns with the orifice. Secure the burner pin cover.

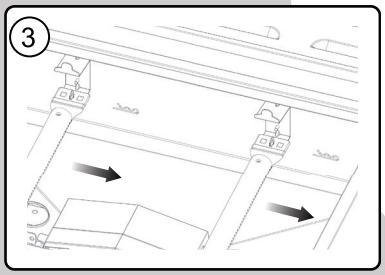

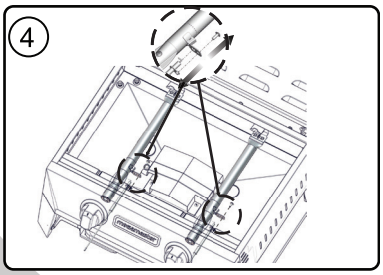

3. Secure the main burner to the firebox back wall with the "R" pin and reinstall the burner pin using a screwdriver.

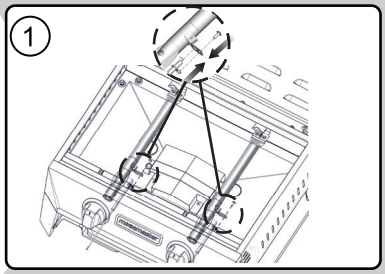

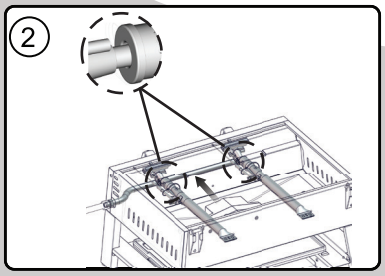

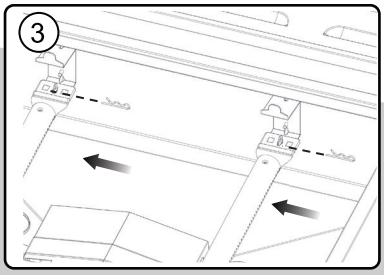

HOW TO ORDER REPLACEMENT PARTS:

To ensure you get the correct replacement part(s) for your gas braai, refer to the parts list in the manual.

You will need the following information:

- Gas braai model number (found on the data sticker).
- Part number of the required replacement.
- Description of the replacement part.
- Quantity needed.

To order parts, visit ou website: **www.megamaster.co.za**

CARE AND MAINTANENCE

COMPONENT	CLEANING INSTRUCTIONS	NOTES
OUTER BRAAI	Use mild cleaner, scrub with the grain. Avoid steel wool. For grease specks, use mild abrasive pad & cleaner.	Clean regularly to prevent rust-like spots.
BRAAI GRATE	Clean immediately after cooking while still hot using a brass bristle brush and our **Megamaster Braai Degreaser** or water.	Wear oven mitt for safety.
BRAAI BURNER	Turn off gas and let cool. Clean with wire brush and a metal scraper for tough stains.	Never use toothpicks, as they may clog ports.
GREASE TRAY	Empty and wipe tray periodically, wash with mild detergent & warm water. Use sand to absorb grease if needed.	Clean after each use to avoid overflow.

TIP

Ensure burner is correctly centered on the orifice before relighting. Clean based on usage frequency. (Handle with care when moving.)

TROUBLESHOOTING GUIDE

PROBLEM	SOLUTION
My braai won't ignite immediately.	Ensure the spark is working, check the battery, and verify the electrode connection. If other burners work, check for blockages in the malfunctioning burner's gas orifice.
Regulator makes noise.	Ensure the regulator vent hole is clear. If blocked, clear it, close gas valves, wait 10 minutes, then restart. If flames are still off, replace the regulator.
Full-size cover does not fit the braai.	Ensure the cover is the correct length and matches the braai's measurements. If it's tight, let it relax in warm sunlight or indoors. For braais with side shelves, bunch the cover and slide it on left to right.
Braai takes a long time to preheat.	Normal preheat time is 10-15 minutes to 250-300 degrees. Cold weather and wind may effect your preheat time.
Burner flames are not light blue.	Check air supply; too much or too little air can affect the flame. Elevation and cold weather can also impact the mixture. Adjust the burner and move the braai from windy areas if needed.

WARRANTY

At Megamaster, we believe in delivering lasting quality with every product. We proudly offer this warranty for the **Megamaster Venture Series 4-in-1 Pizza Oven (Model #820-0264C)** to the original consumer-purchaser. Our commitment ensures that your braai is free from defects in workmanship and materials after proper assembly and normal home use, starting from the date of purchase. Megamaster's obligation is limited to repair, replacement, or depreciated value, at the option of Megamaster.

TO ENSURE A LASTING BRAAI

FOLLOW THE STEPS

1 REGISTER & ACTIVATE YOUR MANUFACTURER'S WARRANTY

Activate your manufacturer's warranty for confirmation of ownership and future product support.

ACTIVATE PRODUCT WARRANTY
FOR A LIFETIME OF BRAAI

PGB2024
REGISTRATION CODE

How to register your product:

- Scan QR code with your mobile camera or visit megamaster.co.za
- Enter unique product code below:

CLAIM YOUR EXCLUSIVE ONLINE OFFER

Unlock access to our exclusive on offers on selected products—enjoy more braais, more often! You'll be redirected to the sales page after signing up.

2 PROOF OF PURCHASE

The manufacturer requires reasonable proof of the original purchase date for any warranty claims. It is essential that you retain your sales receipt and/or invoice as evidence of purchase.

If the product was received as a gift, we kindly ask that the gift giver submit the proof of purchase on your behalf.

Defective or missing parts for this limited warranty will not be replaced without registration or proof of purchase.

The manufacturer may request photographic evidence of damage.

To submit a warranty claim, please follow the steps below:

1. Visit our website & complete the Warranty Claim Form

OR

Email us directly at info@megamaster.co.za

2. To help us assist you as quickly as possible, please include the following information in your submission:
   - **Proof of purchase**
   - **Your contact number**
   - **A detailed description of the issue**
   - **Clear images showing the issue**

3 RETURNING DEFECTIVE PARTS

For claims, you may be asked to return defective parts. Under this limited warranty parts required to complete such repair or replacement shall be free of charge to you except for all shipping costs for the return, which are your responsibility (prepaid by you), for inspection.

Manufacturer's will repair or replace the parts which are proven defective only during the applicable warranty period from the original date of purchase.

Manufacturer's liability is limited to repairing or replacing defective parts. Manufacturer is not liable for indirect damages, commercial use, or failure due to improper care.

No coverage for shipping, reinstallation, or service calls.

IMPORTANT NOTE

Warranty applies only to the original purchaser and is non-transferable. If original parts are unavailable, a similar replacement will be sent.

4 WARRANTY PERIODS

TUBE BURNERS

6 MONTHS (LIMITED) EXCLUDES COSMETIC ISSUES LIKE RUST, SCRATCHES, AND CORROSION.

COOKING GRIDS & FLAME TAMERS

6 MONTHS (LIMITED) EXCLUDES DROPS, CHIPS, SCRATCHES, OR SURFACE DAMAGE.

STAINLESS STEEL PARTS

6 MONTHS (LIMITED) EXCLUDES COSMETIC ISSUES LIKE RUST, SCRATCHES, AND CORROSION.

OTHER PARTS (E.G., VALVES, FRAME, IGNITER)

6 MONTHS (LIMITED) EXCLUDES CHIPPING, RUST, SCRATCHES, AND SURFACE CORROSION.

BRAAI

1 YEAR (LIMITED) EXCLUDES COSMETIC ISSUES LIKE RUST, SCRATCHES, AND CORROSION.

5 WARRANTY EXCLUSIONS

- **Cosmetic Damage:**
  - Scratches, dents, discoloration, and surface rust (including stainless steel parts) are not covered.
  - Damage caused by abrasive cleaners or tools is not covered.
- **Accidents & Misuse:**
  - Damage resulting from accidents, alteration, or misuse of the product is not covered.
- **Environmental Factors:**
  - Damage caused by acts of God (e.g., fire, flood, inclement weather) is not covered.
  - Tampering by animals or damage from hostile environments is not covered.
- **Improper Installation:**
  - If the product is improperly installed or not in accordance with the manufacturer's guidelines, it voids the warranty.
- **Lack of Maintenance:**
  - Damage caused by failure to maintain and clean the product regularly is not covered.
- **Food Loss or Personal Damage:**
  - Loss of food due to product failure and personal injury or property damage are not covered under the warranty.
- **Other Specific Exclusions:**
  - Shipping charges for parts under warranty are the responsibility of the consumer.
  - Service calls, repairs from unauthorized modifications, reinstallation, or transportation are not covered.
  - The warranty does not apply if the product is used for commercial purposes or outside of residential use.
- **Manufacturer will not pay for:**
  - Repairs when your product is used for other than normal, single-family household or residential use
  - Service calls to your home.

- **Manufacturer will not pay for:**
  - Repairs when your product is used for other than normal, single-family household or residential use
  - Service calls to your home.
  - Replacement parts or repair labor costs for units operated outside South Africa.
  - Pickup and delivery of your product.
  - Postage fees or photo processing fees for photos sent in as documentation.
  - Repairs to parts or systems resulting from unauthorised modifications made to the product.
  - The removal / reinstallation of your product.
  - Shipping cost, standard or expedited, for warranty/non warranty and replacement parts.

DISCLAIMER OF IMPLIED WARRANTIES & LIMITATION OF REMEDIES

- Repair or replacement of defective parts is the only remedy under this warranty.
- This warranty is the sole express warranty; no other product specifications or warranties are implied.
- Manufacturer's liability is limited to the purchase price.
- Warranty applies only to products bought from authorised retailers.

megamaster®

TOGETHER, MADE BETTER

CONTACT INFORMATION

Tel: +27 (12) 802 1515, CAT
Email: info@megamaster.co.za
Website: www.megamaster.co.za

820-0264C