The Dickinson

550 mm countertop AquaStone basin

8-DKN-WH **MATT WHITE**



PRODUCT SPECIFICATION

Material	**Stone Resin**
Overall dimensions (L x W x H)	**550 x 400 x 125 mm**
Installation type	**Countertop**
Colour	**Matt White**
Waste	**Click clack waste (Matt White)**
Guarantee	**Lifetime**

BOX CONTENTS

AquaStone basin with click clack waste (Matt White).

GUARANTEE

Lifetime

TECHNICAL DRAWINGS

Dimensions in mm / Not to scale

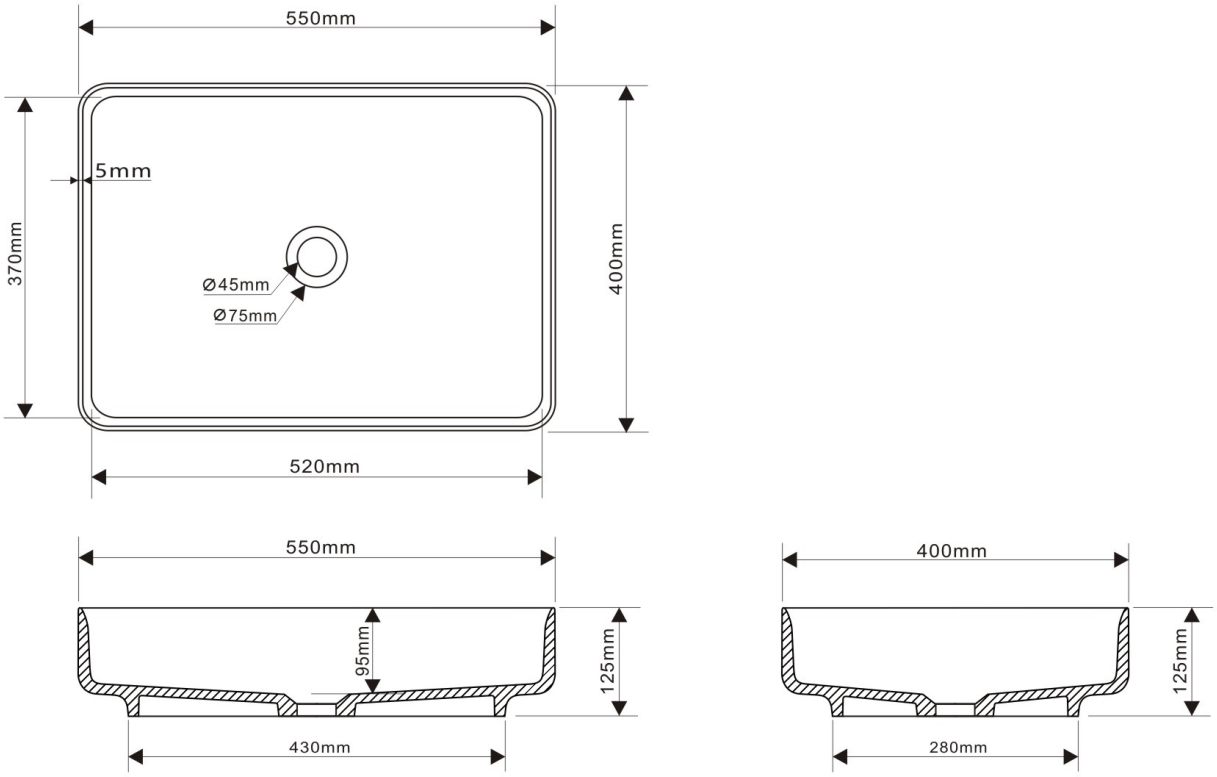

All dimensions are in mm. Drawings are not to scale. House of Piccadilly reserves the right to amend product specifications without prior notice.

The Dickinson

550 mm countertop AquaStone basin

8-DKN-MB MATT BLACK



PRODUCT SPECIFICATION

Material	**Stone Resin**
Overall dimensions (L x W x H)	**550 x 350 x 120 mm**
Installation type	**Countertop**
Colour	**Matt Black**
Waste	**Click clack waste (Matt Black)**
Guarantee	**Lifetime**

BOX CONTENTS

AquaStone basin with click clack waste (Matt Black).

GUARANTEE

Lifetime

TECHNICAL DRAWINGS

Dimensions in mm / Not to scale

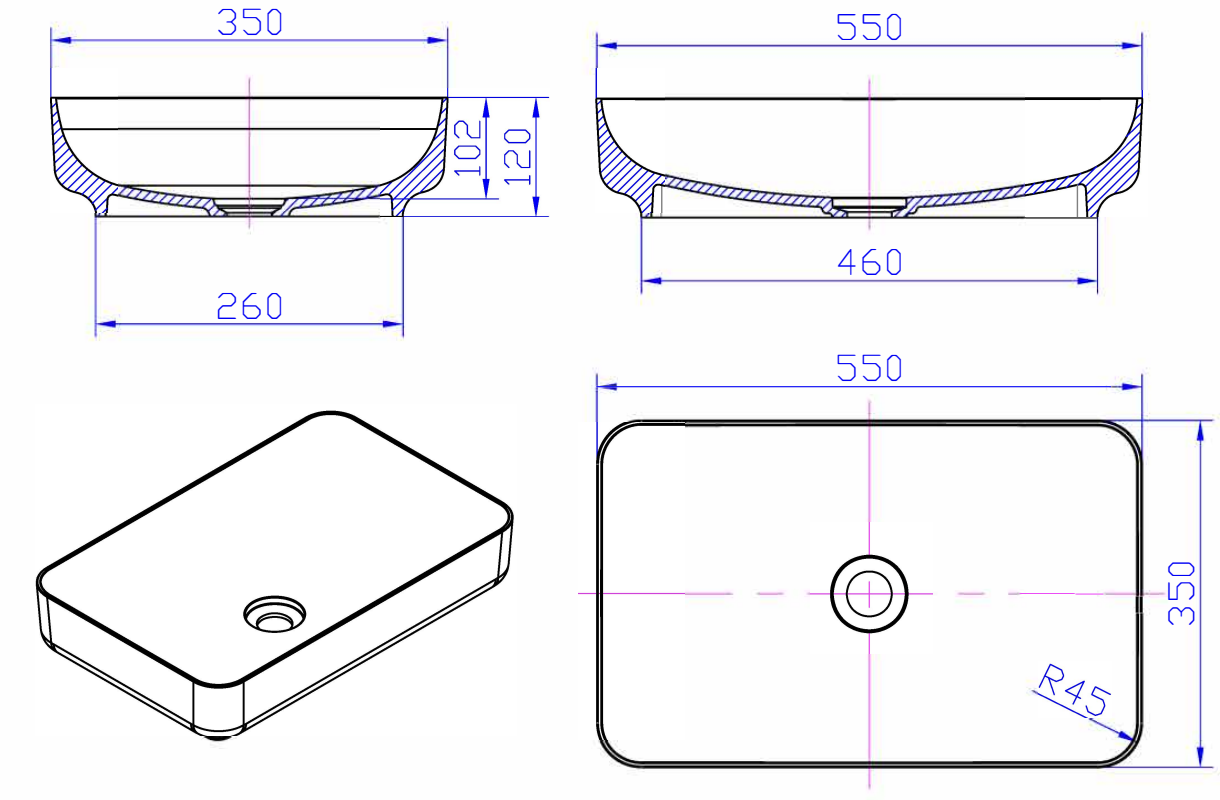

All dimensions are in mm. Drawings are not to scale. House of Piccadilly reserves the right to amend product specifications without prior notice.