Technical Data sheet

Albert Towel Rail White & Chrome

ALB-29

5 Year Warranty

Specification

Brand	House of Piccadilly
Range	Albert
Product code	ALB-29
Finish/Colour	White & Chrome
Product type	Towel Rail
Material	Mild Steel
Bars	5

Technical Information

Height - 963 mm

Width - 538 mm

Depth - 230 mm

Net Weight - 13.5 kg

Gross Weight - 16.5 kg

BTU - 1469

Watts - 431
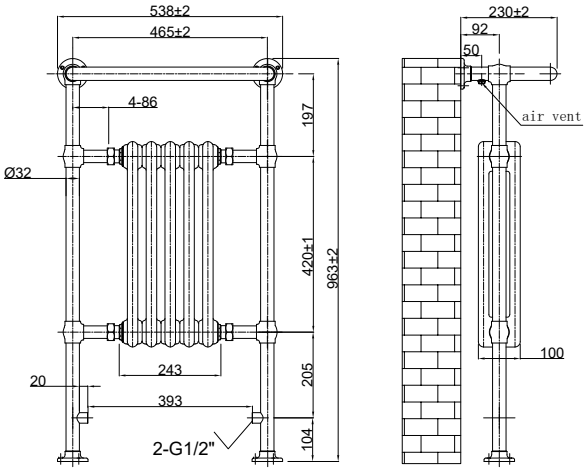
Drawing