The Grant

550 mm countertop AquaStone basin

8-GRA-WH **MATT WHITE**

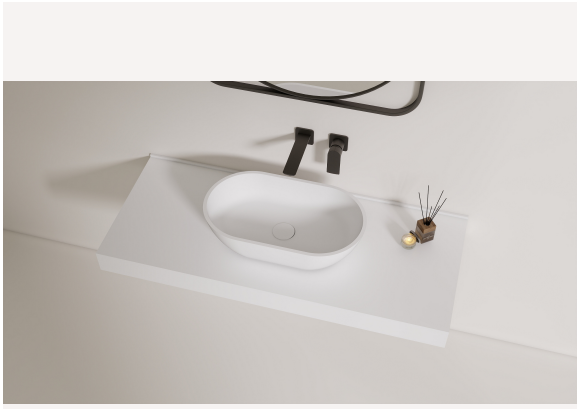

PRODUCT SPECIFICATION

Material	**Stone Resin**
Overall dimensions (L x W x H)	**550 x 320 x 130 mm**
Installation type	**Countertop**
Colour	**Matt White**
Waste	**Click clack waste (Matt White)**
Guarantee	**Lifetime**

BOX CONTENTS

AquaStone basin with click clack waste (Matt White).

GUARANTEE

Lifetime

TECHNICAL DRAWINGS

Dimensions in mm / Not to scale

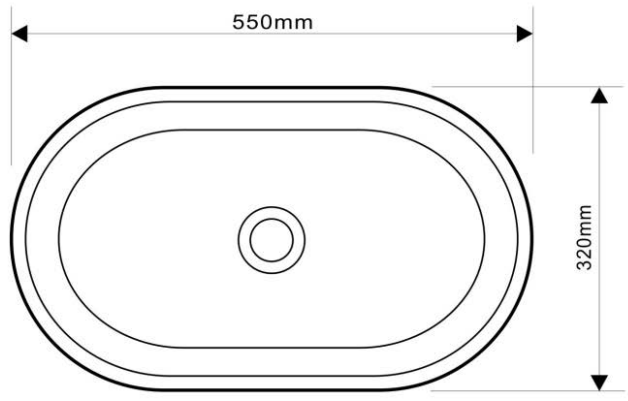

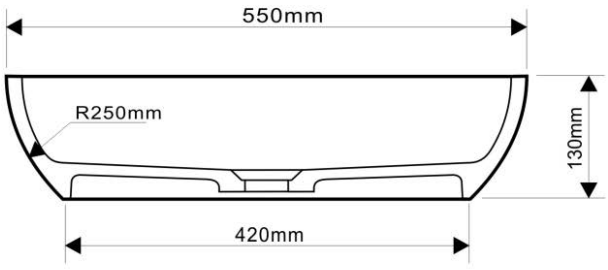

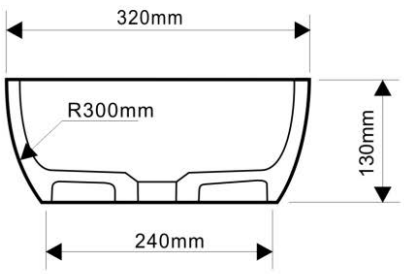

All dimensions are in mm. Drawings are not to scale. House of Piccadilly reserves the right to amend product specifications without prior notice.

The Grant

580 mm countertop AquaStone basin

8-GRA-MG MATT GREY



PRODUCT SPECIFICATION

Material	**Stone Resin**
Overall dimensions (L x W x H)	**580 x 380 x 120 mm**
Installation type	**Countertop**
Colour	**Matt Grey**
Waste	**Click clack waste (Matt Grey)**
Guarantee	**Lifetime**

BOX CONTENTS

AquaStone basin with click clack waste (Matt Grey).

GUARANTEE

Lifetime

TECHNICAL DRAWINGS

Dimensions in mm / Not to scale

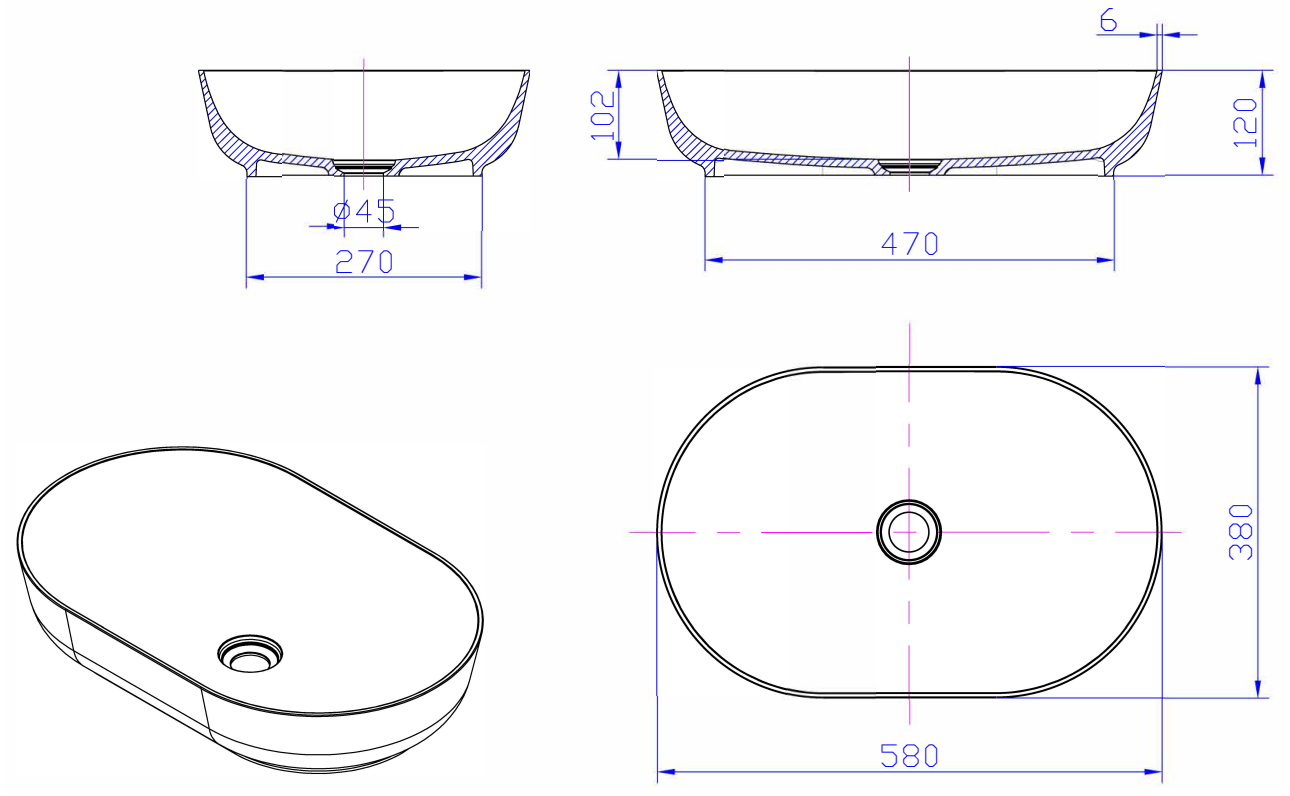

All dimensions are in mm. Drawings are not to scale. House of Piccadilly reserves the right to amend product specifications without prior notice.