The Hepworth

600 mm countertop AquaStone basin

8-HEP-MB **MATT BLACK**



PRODUCT SPECIFICATION

Material	**Stone Resin**
Overall dimensions (L x W x H)	**600 x 380 x 150 mm**
Installation type	**Countertop**
Colour	**Matt Black**
Waste	**Click clack waste (Matt Black)**
Guarantee	**Lifetime**

BOX CONTENTS

AquaStone basin with click clack waste (Matt Black).

GUARANTEE

Lifetime

TECHNICAL DRAWINGS

Dimensions in mm / Not to scale

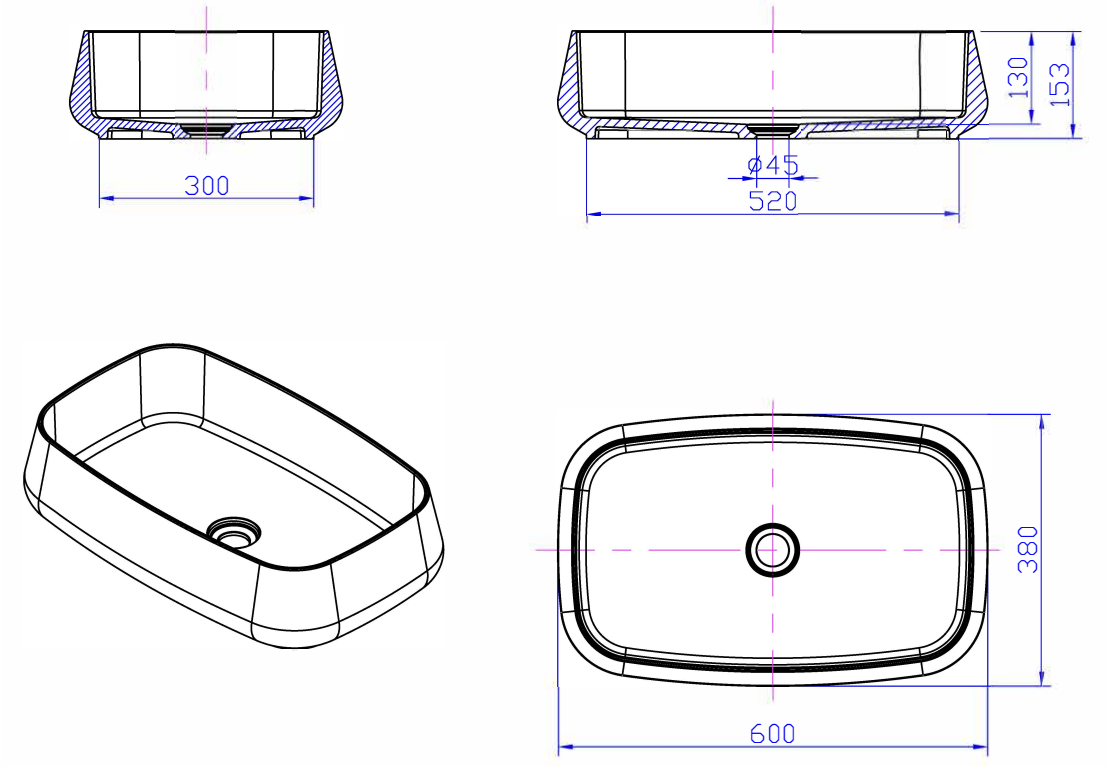

All dimensions are in mm. Drawings are not to scale. House of Piccadilly reserves the right to amend product specifications without prior notice.