Technical Data sheet

Toilet Paper Holder Vienna

GEO-112

15 Year Warranty

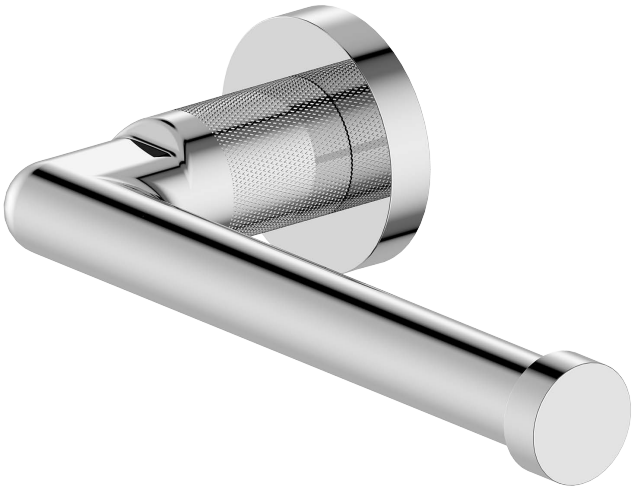

Specification

Brand	House Of Piccadilly
Range	Georgia
Product code	GEO-112
Finish/Colour	Chrome, Brushed Gunmetal
	Brushed Gold, Matt Black
Material	Brass

Box Content

Toilet Paper Holder
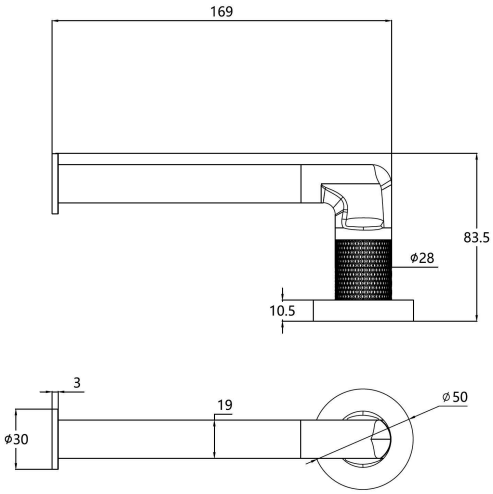
Drawing