Technical Data sheet

Robe Hook
Vienna Accessories

GEO-113

15 Year Warranty

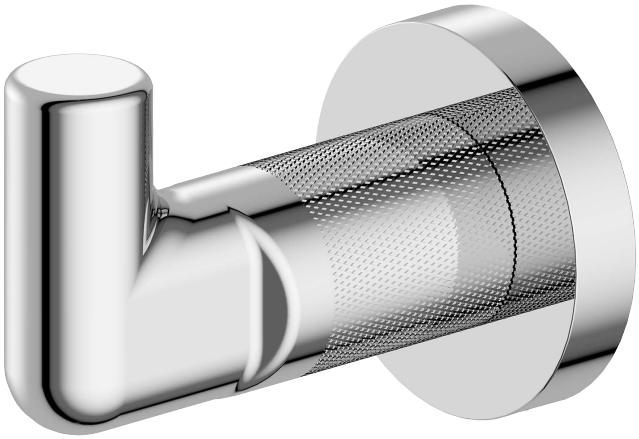

Specification

Brand	House Of Piccadilly
Range	Vienna Accessories
Product code	GEO-113
Finish/Colour	Chrome, Brushed Gunmetal
	Matt Black, Brushed Gold
Material	Brass

Box Content

Robe Hook
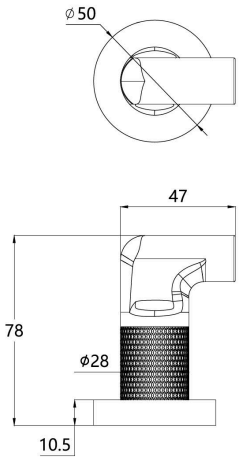
Drawing