Technical Data sheet

Concealed Shower Set Vienna

VIE-211

15 Year Warranty

Specification

Brand	House Of Piccadilly
Range	Vienna
Product code	VIE-211
Finish/Colour	Chrome, Matt Black
	Brushed Gold
Material	Brass

Technical Information

Concealed Shower Set

Drill Holes/Valves ø50/Shower Arm & Hand Shower ø25

Box contents:

Concealed Shower Set

Flow Rate Graph

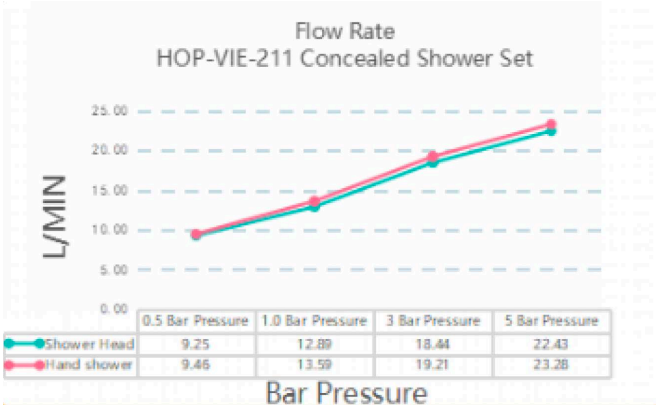

Drawing

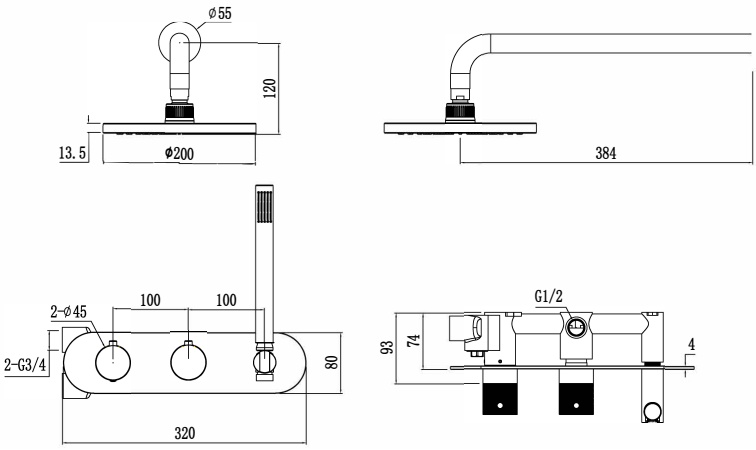

For more information about this product or to visit our full product range please contact us 01904 233113 | sales@houseofpiccadilly.com

www.houseofpiccadilly.com