Technical Data sheet

The Darcey Freestanding Bath Mixer

DAR-412-PN

15 Year Warranty

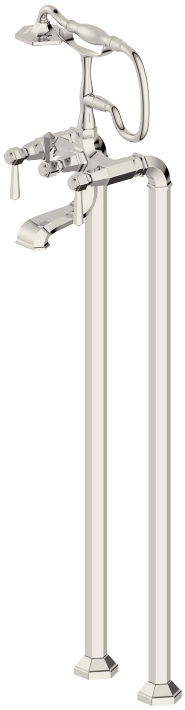

Specification

Brand	House Of Piccadilly
Range	Darcey
Product code	DAR-412-PN
Finish/Colour	Polished Nickel
Product type	Freestanding Bath Mixer
Material	Brass
Connection Size	1/2"

Technical Information

Freestanding Bath Tap

Drill Hole Diameter ø25

Box contents:

Freestanding Bath Tap

Flow Rate Graph

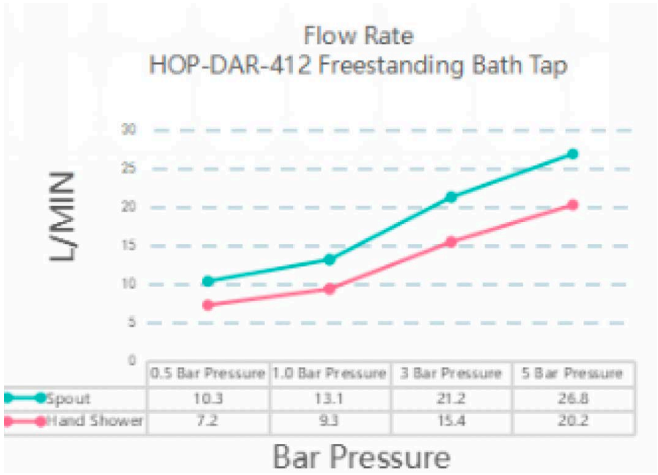
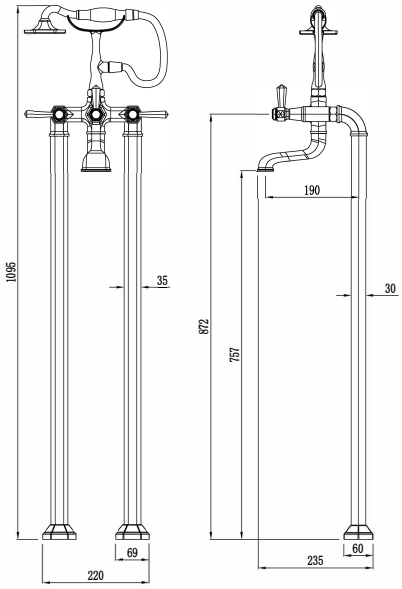
Drawing