Technical Data sheet

The Darcey
Manual Mixer Mixer

DAR-213-PN

15 Year Warranty

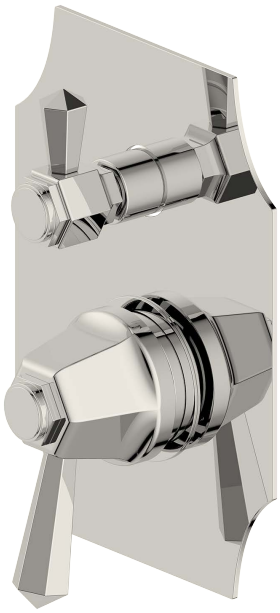

Specification

Brand	House Of Piccadilly
Range	Darcey
Product code	DAR-213-PN
Finish/Colour	Polished Nickel
Product type	Manual Mixer Valve
Material	Brass
Connection Size	1/2"

Technical Information

Shower Mixer

Box contents:

Shower Mixer

Flow Rate Graph

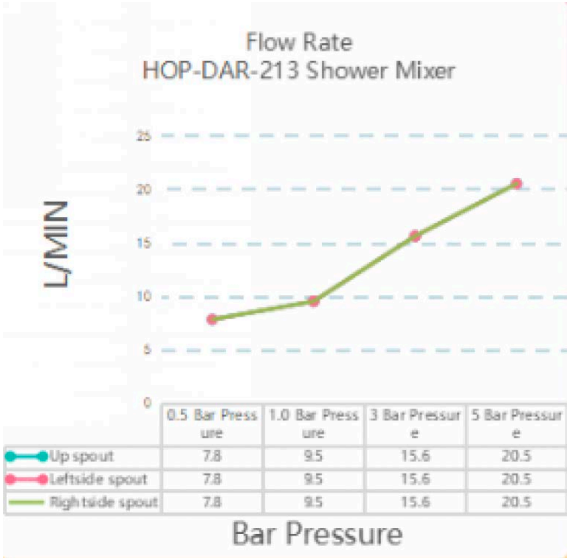

Drawing

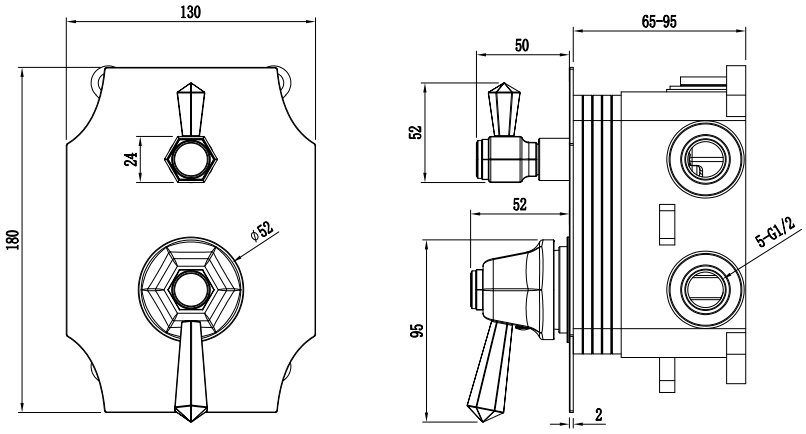

For more information about this product or to visit our full product range please contact us 01904 233113 | sales@houseofpiccadilly.com

www.houseofpiccadilly.com