Technical Data sheet

Darcey Mono Basin Mixer Polished Nickel

HOP-DAR-311-PN

15 Year Warranty

Specification

Brand	House Of Piccadilly
Range	Darcey
Product code	HOP-DAR-311-PN
Finish/Colour	Polished Nickel
Product type	Mono Basin Mixer
Material	Brass
Connection Size	1/2"

Technical Information

Mono Basin Mixer

Drill Hole Diameter ø48-50

Box contents:

Mono Basin Mixer

Flow Rate Graph

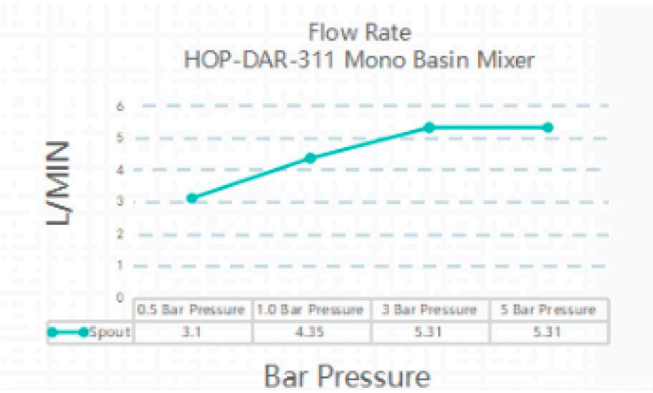
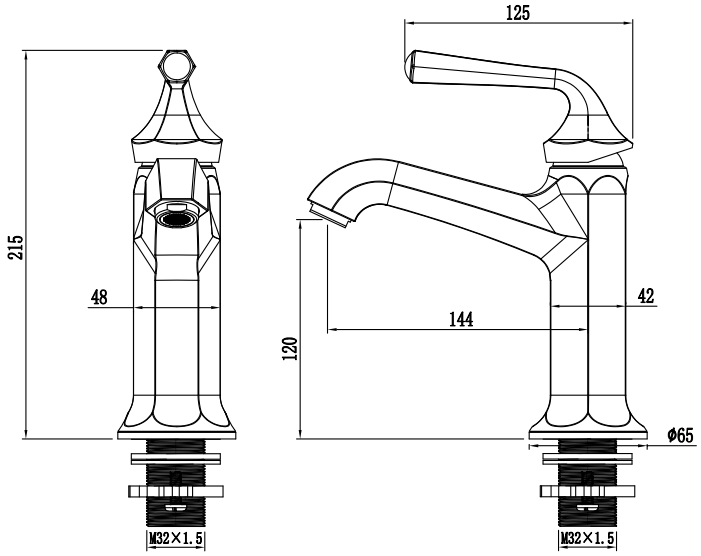
Drawing