Technical Data sheet

The Darcey
Wall Mounted Basin Mixer

DAR-313-PN

15 Year Warranty

Specification

Brand	House Of Piccadilly
Range	Darcey
Product code	DAR-313-PN
Finish/Colour	Polished Nickel
Product type	Wall Mounted Basin Mixer
Material	Brass
Connection Size	1/2"

Technical Information

Wall Mounted Basin Mixer

Drill Hole Diameter ø35

Box contents:

Wall Mounted Basin Mixer

Flow Rate Graph

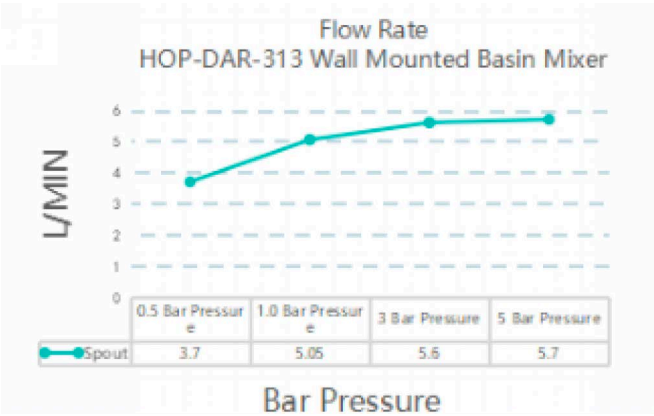
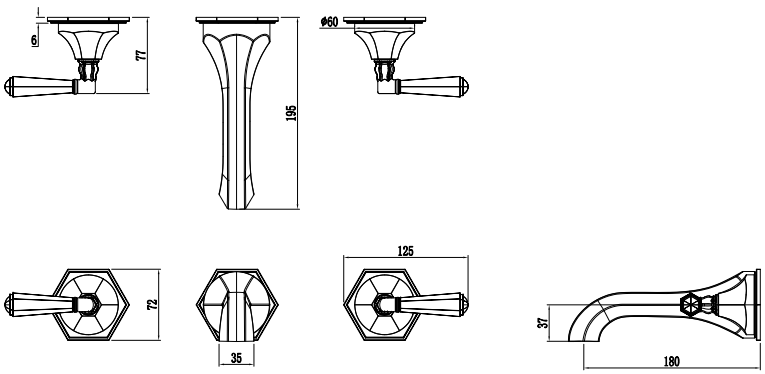
Drawing