Technical Data sheet

Angled Modern Radiator Valve Matt Black

HOP-MOD-ANG-RV-613-MB

5 Year Warranty

Specification

Brand	House of Piccadilly
Range	Radiator Valves
Product code	HOP-MOD-ANG-RV-613-MB
Finish/Colour	Matt Black
Product type	Angled Radiator Valve
Material	Brass Internals
Radiator Coupler	1/2" BSPT Male Thread

Technical Information

Thermostatic Radiator Valve (Pair)

Box contents:

Thermostatic Radiator Valve (Pair)

Drawing

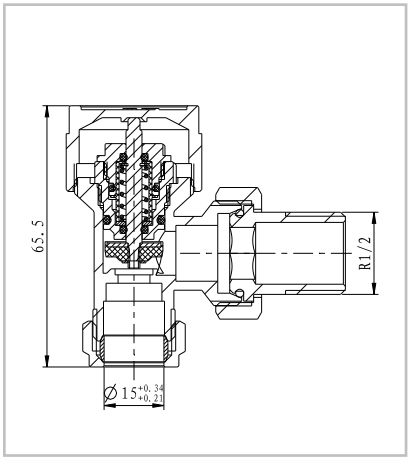

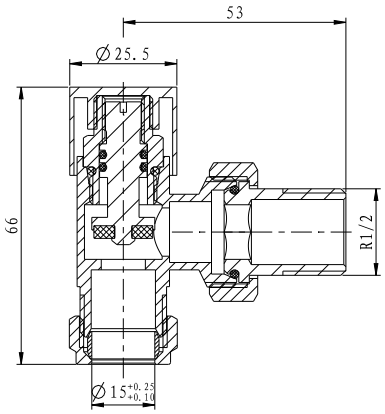

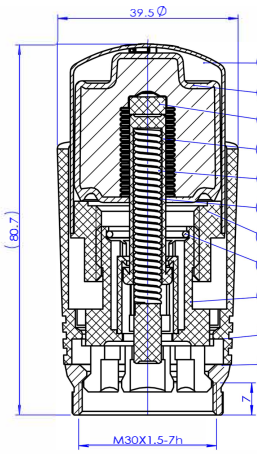

Technical Data sheet

Corner Modern Radiator Valve Matt Black

HOP-MOD-COR-RV-612-MB

5 Year Warranty

Specification

Brand	House of Piccadilly
Range	Radiator Valves
Product code	HOP-MOD-COR-RV-612-MB
Finish/Colour	Matt Black
Product type	Corner Radiator Valve
Material	Brass Internals
Radiator Coupler	1/2" BSPT Male Thread

Technical Information

Thermostatic Radiator Valve (Pair)

Box contents:

Thermostatic Radiator Valve (Pair)
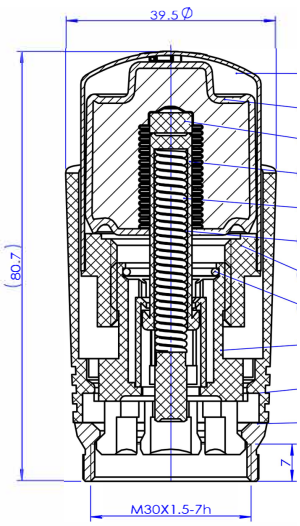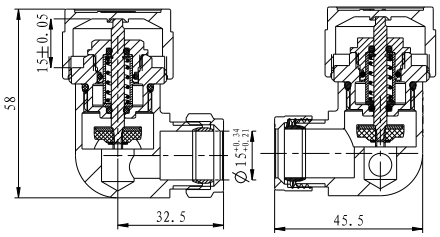
Drawing