Technical Data sheet

Ridgeway Towel Rail Chrome & White

RIDGE-30

5 Year Warranty

Specification

Brand	House of Piccadilly
Range	Ridgeway
Product code	RIDGE-30
Finish/Colour	Chrome & White
Product type	Towel Rail
Material	Mild Steel
Bars	8

Technical Information

Height - 963 mm

Width - 673 mm

Depth - 230 mm

Net Weight -17 kg

Gross Weight - 20 kg

BTU - 2630

Watts - 771
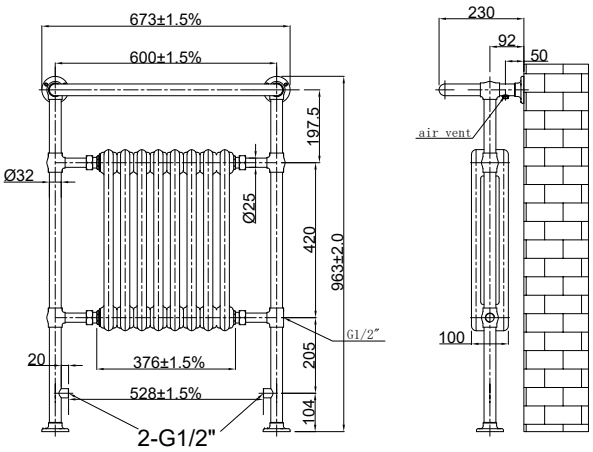
Drawing