Technical Data sheet

Walter Towel Rail Antique Brass & White

Walter-32

5 Year Warranty

Specification

Brand	House of Piccadilly
Range	Traditional Towel Rail
Product code	Walter-32
Finish/Colour	Antique Brass & White
Product type	Towel Rail
Material	Mild Steel
Bars	8

Technical Information

Height - 963 mm

Width - 673 mm

Depth - 230 mm

Net Weight -17 kg

Gross Weight - 20 kg

BTU - 2630

Watts - 771
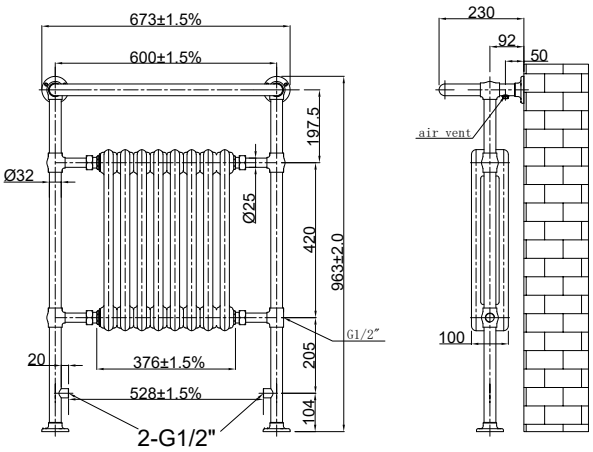
Drawing