MW07TS
DIVERTER MIXER

meir®

HANDLE VARIANTS

Paddle:MW07TSPD Paddle:MW07TSPDN

FEATURES

- Refer to the Meir website for warranty terms & conditions, and available finishes.
- In-built diverter switch
- Flow rate 18L p/m at 3 bar pressure.
- European components and cartridge
- Solid brass construction
- Box Weight 1.7Kg

CARE

- Do not install tapware using any form of acetone silicones.
- Do not apply physical items (such as tools) directly to product.
- Never use house-hold or commercial detergents, citrus based cleaners, or abrasive cleaners.
- Clean using a mild washing soap solution rinsed, and dry with a soft cloth.
- Check for any product defects before installation.
- Refer to the installation manual for correct installation.

SPECIFICATIONS

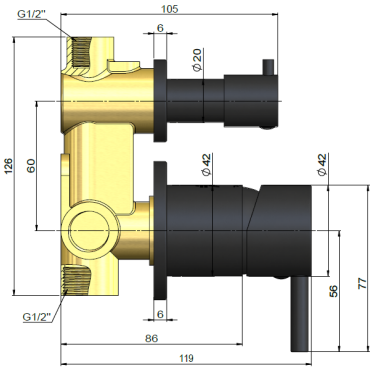

PADDLE HANDLE

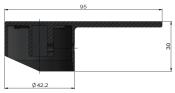

PINLESS HANDLE

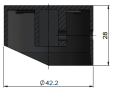

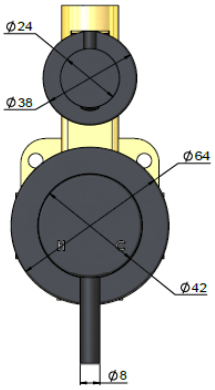

TOLERANCES

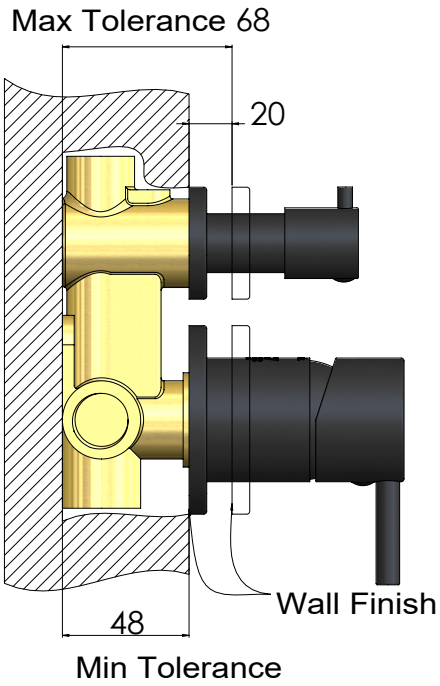

FLOW RATE GRAPH

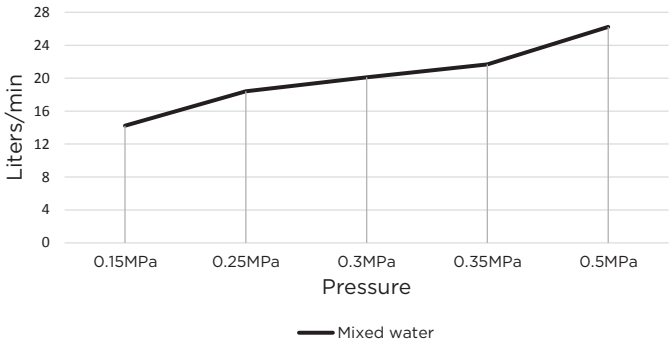

CREDENTIALS

- Watermark AS/NZS 3718 WMKA25013

EXPLODED VIEW

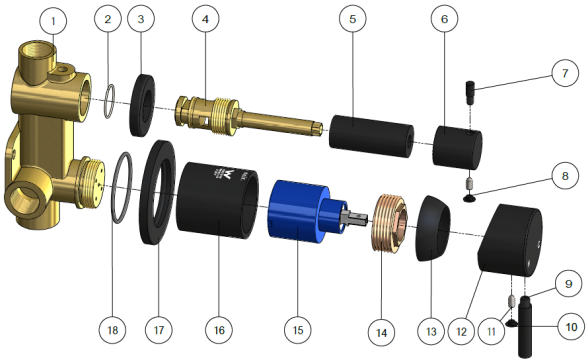

No.	PART NAME
1	Body
2	O-ring
3	Back Plate
4	Divertor Cartridge
5	Decor Cover
6	Handle
7	Pin Lever
8	Decor Knob
9	Pin Lever
10	Decor Knob
11	Screw
12	Handle
13	Decor Cover
14	Nut
15	D35 Cartridge
16	Decor Cover
17	Back Plate
18	O-ring