Technical Data sheet

Deck Mounted Bath Side Valves Fittings

BATHV-412

15 Year Warranty

Specification

Brand	House Of Piccadilly
Range	Bath Valves
Product code	BATHV-412
Finish/Colour	Chrome, Matt Black, Gunmetal
	Brushed Gold, Brushed Nickel
Material	Brass
Connection Size	3/4"

Technical Information

Deck Mounted Bath Valves

Box contents:

Deck Mounted Bath Valves

Flow Rate Graph

	Product Code	HOP-BATHV-412-CH
	Pressure (Bar)	Average flow rate
1	0.5	9.9 L/min
2	1	14.6 L/min
3	2	21.2 L/min
4	3	26.2 L/min
5	4	29.9 L/min
6	5	33.2 L/min
7	6	36.5 L/min
8	7	40 L/min
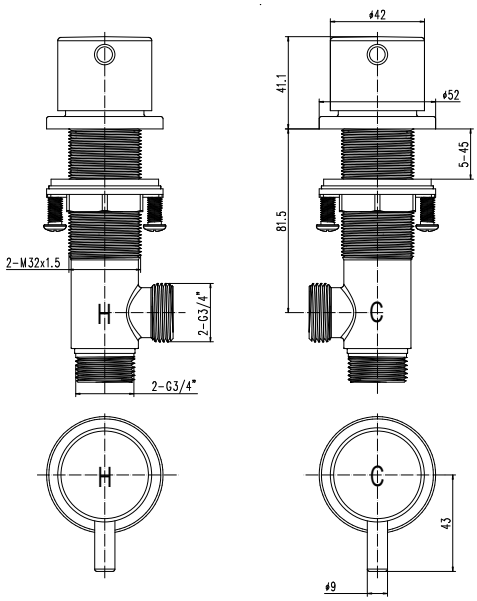
Drawing