Technical Data sheet

Vienna 2 Hole Deck Mounted Bath Filler - Brushed Gold

HOP-VIE-413-BG

15 Year Warranty

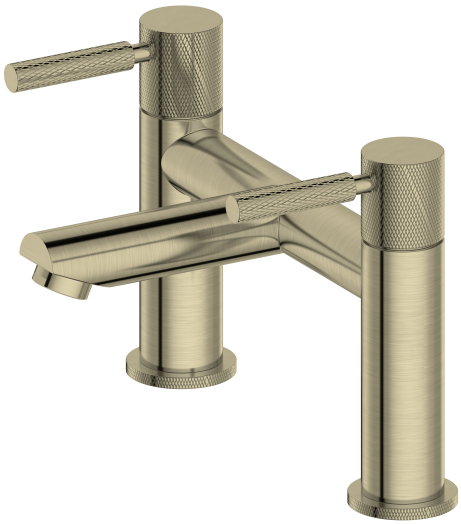

Specification

Brand	House Of Piccadilly
Range	Vienna
Product code	HOP-VIE-413-BG
Finish/Colour	Brushed Gold
Product type	2 Hole Deck Mounted Bath Filler
Material	Brass
Connection Size	3/4"

Technical Information

2 Hole Deck Mounted Bath Filler

Box contents:

2 Hole Deck Mounted Bath Filler

Flow Rate Graph

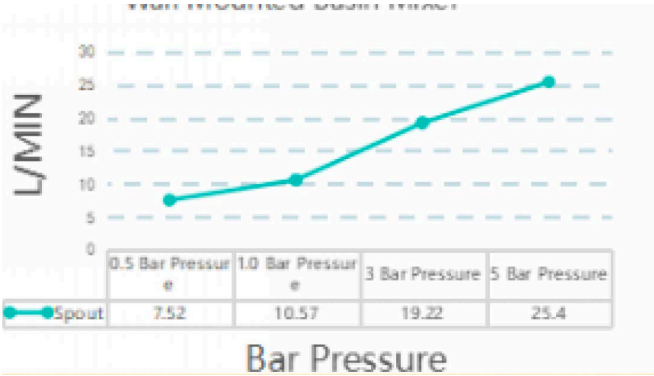

Drawing

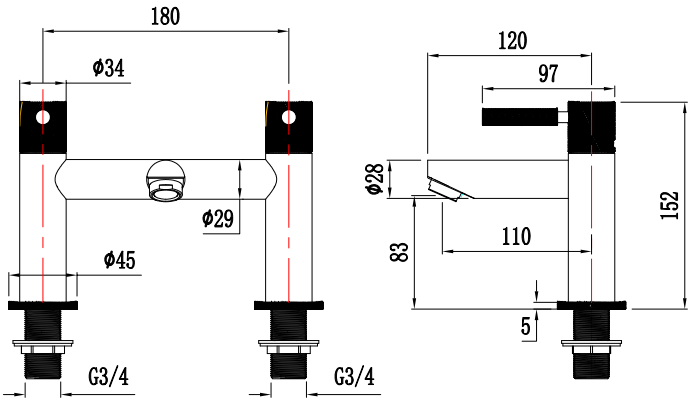

Technical Data sheet

Vienna Extended Mono Basin Mixer Chrome

HOP-VIE-314-CH

15 Year Warranty

Specification

Brand	House Of Piccadilly
Range	Vienna
Product code	HOP-VIE-314-CH
Finish/Colour	Chrome
Product type	Extended Mono Basin Mixer
Material	Brass
Connection Size	1/2"

Technical Information

2 Hole Deck Mounted Bath Filler

Box contents:

2 Hole Deck Mounted Bath Filler

Flow Rate Graph

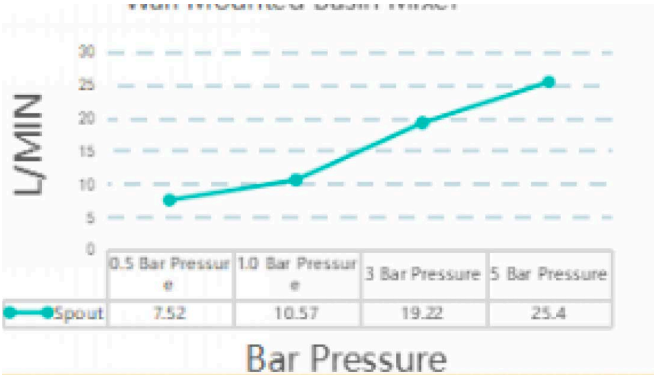

Drawing

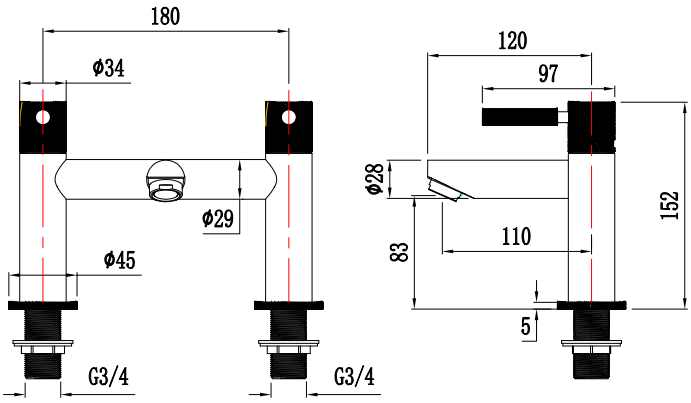

Technical Data sheet

Vienna 2 Hole Deck Mounted Bath Filler - Matt Black

HOP-VIE-413-MB

15 Year Warranty

Specification

Brand	House Of Piccadilly
Range	Vienna
Product code	HOP-VIE-413-MB
Finish/Colour	Matt Black
Product type	2 Hole Deck Mounted Bath Filler
Material	Brass
Connection Size	1/2"

Technical Information

2 Hole Deck Mounted Bath Filler

Box contents:

2 Hole Deck Mounted Bath Filler

Flow Rate Graph

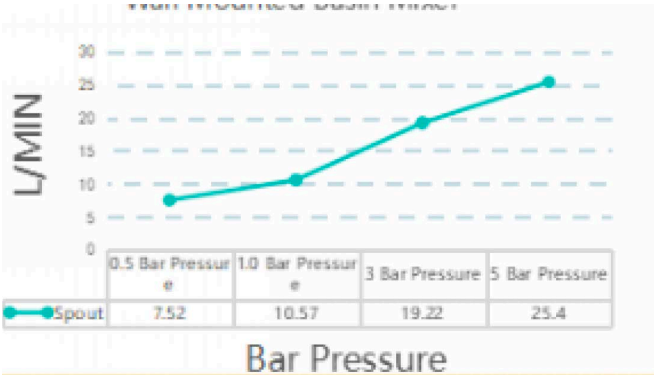
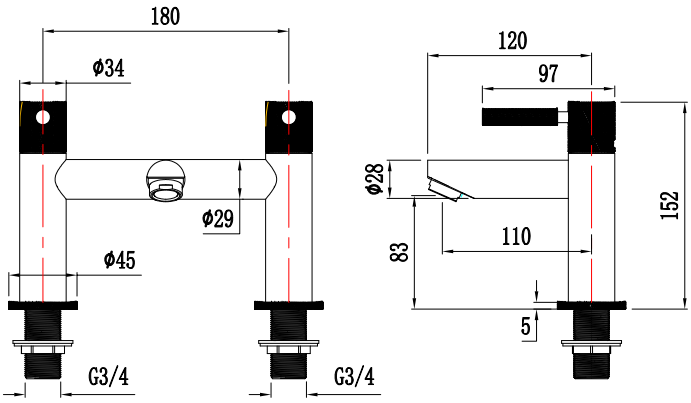
Drawing