SPECIFICATION DATA

T991A PROPORTIONAL TEMPERATURE CONTROLLER

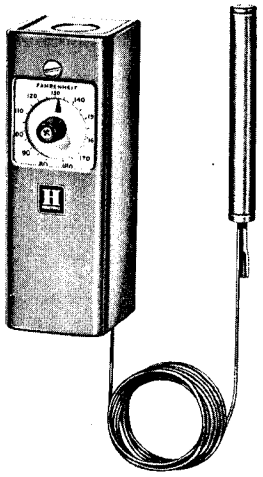

application: The T991A Temperature Controller is a Series 90 controller providing proportional control of temperature in ducts, tanks pipes, and similar applications.

construction: The T991A consists of a pressure actuated diaphragm and lever mechanism, which operates a potentiometer, and a terminal block; all housed in a sturdy metal case. A bulb and capillary tubing permit remote temperature sensing. The setpoint adjustment dial may be set and read through the cover and a dial inside the case provides an adjustable throttling range of from 3 to 30 deg Fahrenheit. The controller is also ambient compensated.

specifications:

MODEL: T991A Temperature Controller.

SPECIAL MODEL—available with a plug-in—cable, for Unit Ventilator applications only. (18 in. 2-conductor or 18 in. 3-conductor cable).

TEMPERATURE RANGES AND LIMITS:

Range	Maximum Ambient Temperature for Controller	Maximum Operating Temperature of Bulb	Bulb Size
0 to 100F	125 F	125 F	½ by 4 3/16
55 to 175F [a]		200 F	½ by 3 9/16
80 to 180F		200 F	½ by 4 3/16
160 to 260F		280 F	½ by 4 3/16
−15 to 35C	52 C	52 C	½ by 4 3/16
15 to 75C [a]		93 C	½ by 3 9/16
30 to 80C		93 C	½ by 4 3/16
75 to 125C		138 C	½ by 4 3/16

[a] Available in 20 ft. by 7/64 O.D. averaging element (copper).

THROTTLING RANGE: Adjustable from 3 to 30 deg F (1.7 to 17 deg C), split at the setpoint.

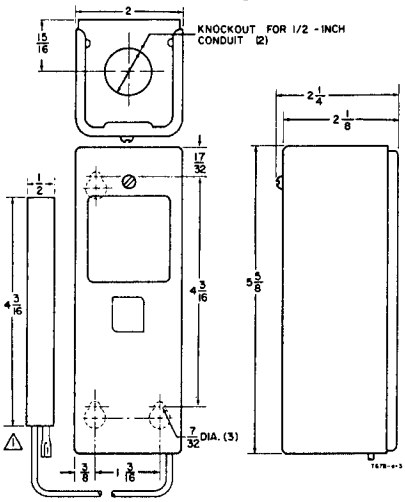

1. Bulb length is 3-9/16 in. on 55 to 175 deg F and 15 to 75 deg C range.

Fig. 1—Approximate Dimensions in Inches.

POTENTIOMETER VALUE: Nominal 135 ohms.

BULB PRESSURE RATING: 50 psi maximum.

CAPILLARY LENGTH AND MATERIAL: (5/64 capillary O.D.)

Copper—5 and 20 feet.

Monel or Stainless Steel—20 feet.

Copper Averaging Element—20 feet by 7/64 O.D.

DIMENSIONS: See Fig. 1.

FINISH: Gray.

ACCESSORIES AVAILABLE:

1. Separable Immersion Wells; Part No. 112622AA, Short neck, ½ in. NPT Copper Well (see form number 90-0559).
2. Pressure Fitting; Part No. 7617ABY, rated at 50 psi water or 15 psi air pressure (see form number 90-0559).
3. Duct Bulb Holder; Part No. 311266D (see form number 90-0559).
4. T-Strap; Part No. 105900, for strapping bulb to a pipe.
5. Bracket Bag Assembly; Part No. 7617ABZ, for mounting the T991A in a Unit Ventilator.
6. Calibration Wrench; Part No. 801534.
7. Bracket Bag Assembly; Part No. 7640HY, Standoff bracket for mounting the T991A to an insulated duct.
8. Bag Assembly; Part No. 7640HX, for mounting the T991A with averaging element when access is not available into the duct.

WHEN SPECIFYING, INDICATE:

1. Model Number (special model or Averaging Element, if applicable).
2. Range.
3. Bulb and Capillary Length and Material.
4. Accessories, if desired.

typical operation: As the air temperature in a discharge duct varies, it is sensed by the bulb of the T991, causing proportional resistance changes in the potentiometer. These changes are translated by a motorized valve or damper into proportional temperature control of air in the discharge duct.

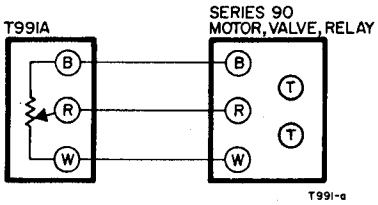

Fig. 2—Typical Hookup.