Technical Data sheet

Vienna Extended Mono Basin Mixer Brushed Gold

HOP-VIE-314-BG

15 Year Warranty

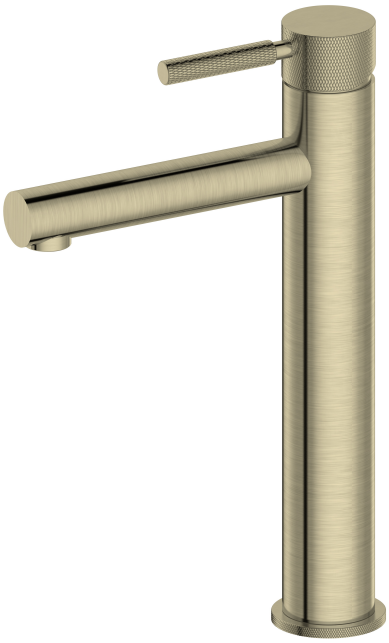

Specification

Brand	House Of Piccadilly
Range	Vienna
Product code	HOP-VIE-314-BG
Finish/Colour	Brushed Gold
Product type	Mono Basin Mixer
Material	Brass
Connection Size	1/2"

Technical Information

Mono Basin Mixer
Deck Mounted
Single Lever
Drill Hole Diameter ø35

Flow Rate Graph

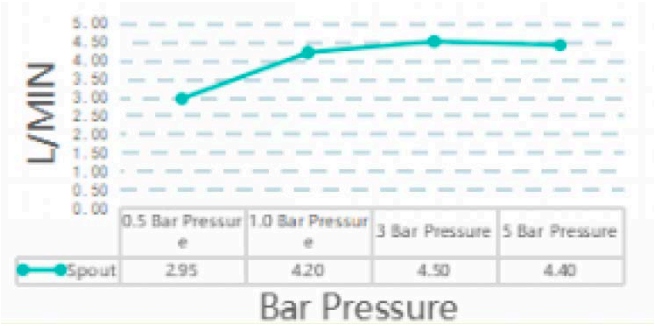

Drawing

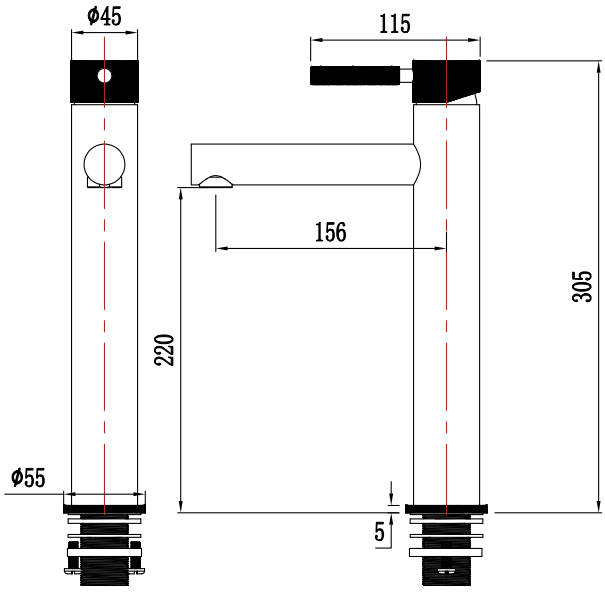

Technical Data sheet

Vienna Extended Mono Basin Mixer Polished Chorme

HOP-VIE-314-CH

15 Year Warranty

Specification

Brand	House Of Piccadilly
Range	Vienna
Product code	HOP-VIE-314-CH
Finish/Colour	Polished Chrome
Product type	Mono Basin Mixer
Material	Brass
Connection Size	1/2"

Technical Information

Mono Basin Mixer
Deck Mounted
Single Lever
Drill Hole Diameter ø35

Flow Rate Graph

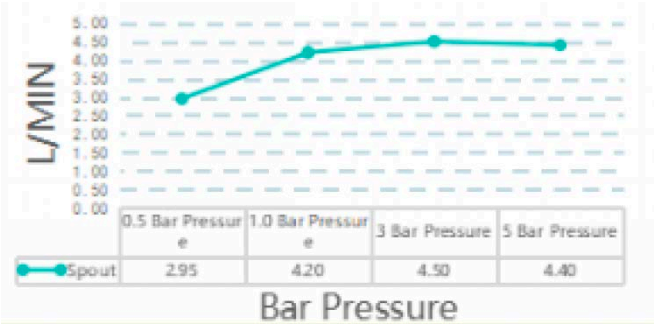

Drawing

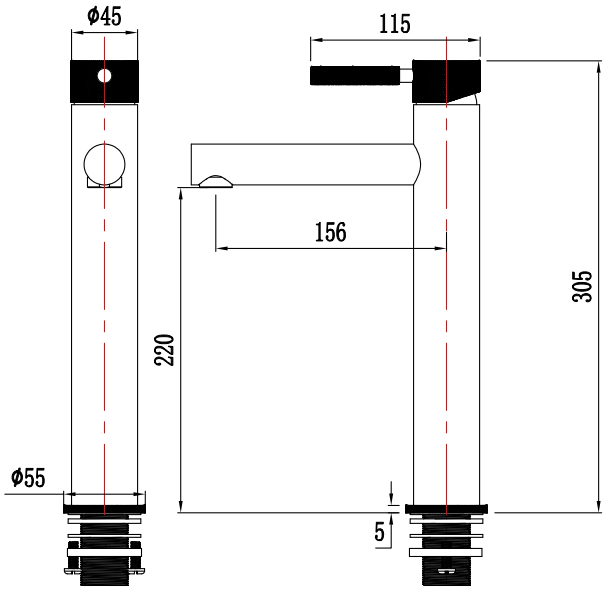

Technical Data sheet

Vienna Extended Mono Basin Mixer Matt Black

HOP-VIE-314-MB

15 Year Warranty

Specification

Brand	House Of Piccadilly
Range	Vienna
Product code	HOP-VIE-314-MB
Finish/Colour	Matt Black
Product type	Mono Basin Mixer
Material	Brass
Connection Size	1/2"

Technical Information

Mono Basin Mixer
Deck Mounted
Single Lever
Drill Hole Diameter ø35

Flow Rate Graph

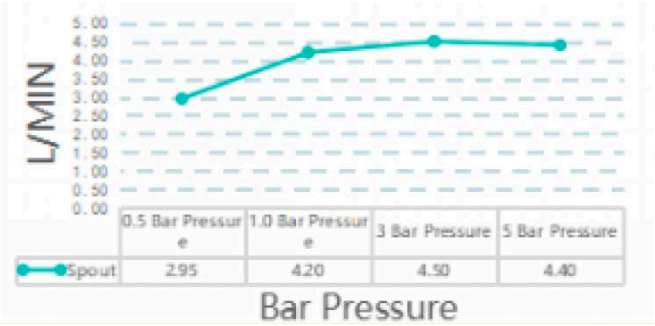
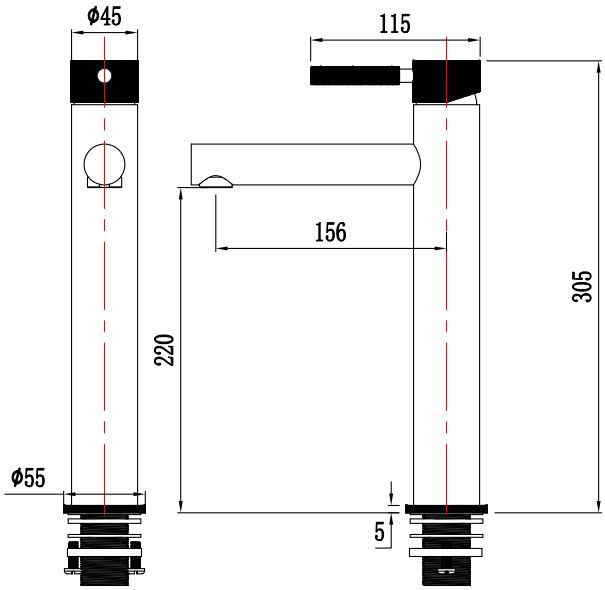
Drawing