Technical Data sheet

Elysha Mini Mono Mixer
Chrome / Brushed Gold / Brushed Nickel

ELYSHA-311

15 Year Warranty

Specification

Brand	House Of Piccadilly
Range	The Elysha
Product code	ELYSHA-311-CH/BG/BN
Finish/Colour	Chrome / Brushed Gold / Brushed Nickel
Product type	Basin Mixer
Material	Brass
Connection Size	1/2"

Technical Information

Mono Basin Mixer

Deck Mounted Drill Hole Diameter ø32

Box contents:

Mono Basin Mixer

Universal Click Clack Waste

Flow Rate

Pressure (Bar)	Average Flow Rate
0.5	4.9L/min
1	6.5L/min
2	9.3L/min
3	11.2L/min
4	13L/min
5	14.8L/min
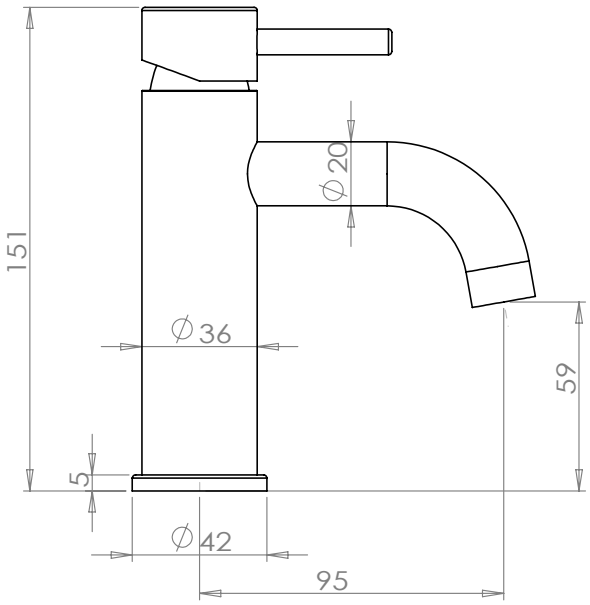
Drawing