Technical Data sheet

Elysha 3 Hole Wall Mounted Basin Mixer Chrome / Brushed Gold / Brushed Nickel

ELYSHA-315

15 Year Warranty

Specification

Brand	House Of Piccadilly
Range	The Elysha
Product code	ELYSHA-315
Finish/Colour	Chrome /Brushed Gold / Brushed Nickel
Product type	3 Hole Wall Mounted Basin Mixer
Material	Brass
Connection Size	1/2"

Technical Information

3 Hole Wall Mounted Basin Mixer

Box contents:

3 Hole Wall Mounted Basin Mixer

Flow Rate

Pressure (Bar)	Average Flow Rate
0.5	5.6L/min
1	8.5L/min
2	12L/min
3	14.9L/min
4	16.7L/min
5	18.7L/min
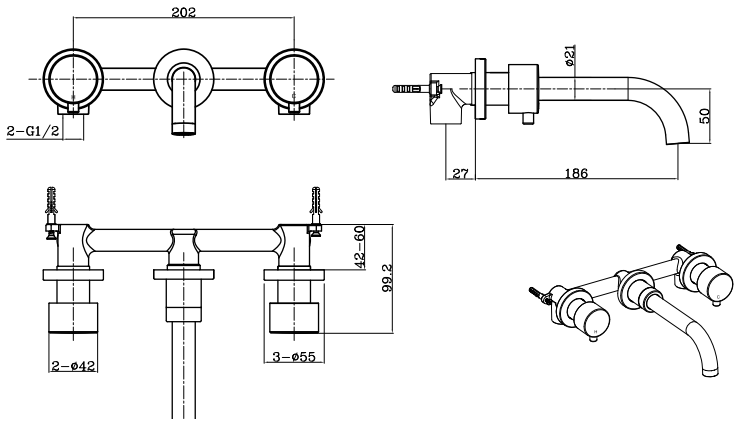
Drawing