Technical Data sheet

Elysha Wall Mounted Bath Mixer
Chrome / Brushed Gold / Brushed Nickel

ELYSHA-411

15 Year Warranty

Specification

Brand	House Of Piccadilly
Range	The Elysha
Product code	ELYSHA-411
Finish/Colour	Chrome / Brushed Gold / Brushed Nickel
Product type	Wall Mounted Bath Mixer
Material	Brass
Connection Size	1/2" & 3/4"

Technical Information

Wall Mounted Bath Mixer

Drill Hole Diameter Spout ø48 Valve 62ø

Box contents:

Wall Mounted Bath Mixer

Flow Rate

Pressure (Bar)	Average Flow Rate
0.5	7.2L/min
1	11.3L/min
2	16.9L/min
3	20.8L/min
4	23.2L/min
5	25.2 L/min
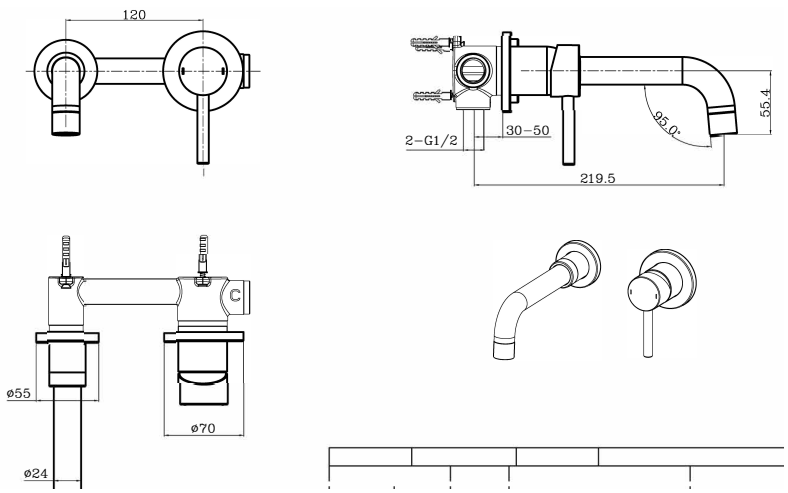
Drawing