Technical Data sheet

Elysha Wall Mounted Basin Mixer
Chrome / Brushed Gold / Brushed Nickel

ELYSHA-313

15 Year Warranty

Specification

Brand	House Of Piccadilly
Range	The Elysha
Product code	ELYSHA-313-CH/BG/BN
Finish/Colour	Chrome / Brushed Gold / Brushed Nickel
Product type	Wall Mounted Basin Mixer
Material	Brass
Connection Size	1/2"

Technical Information

Wall Mounted Basin Mixer

Box contents:

Wall Mounted Basin Mixer
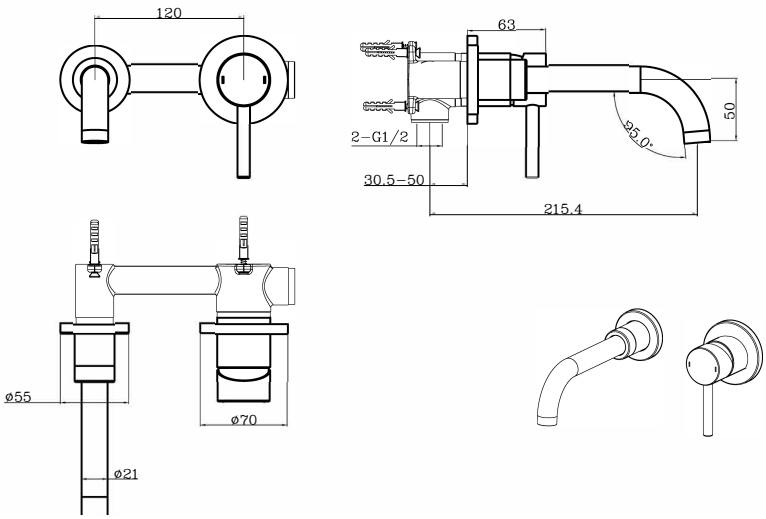
Drawing