Technical Data sheet

The Jasper
Mono Basin Mixer & Universal Waste

JASP-312

15 Year Warranty

Specification

Brand	House Of Piccadilly
Range	The Jasper
Product code	JASP-312
Finish/Colour	Chrome, Matt Black, Brushed Gold, Brushed Nickel
Material	Brass
Connection Size	1/2"

Technical Information

Mono Basin Mixer & Universal Basin Waste

Deck Mounted, Drill Hole Diameter ø32

Box contents:

Mono Basin Mixer & Universal Basin Waste

Flow Rate

Pressure (Bar)	Average Flow Rate
0.5	5.6L/min
1	6.9L/min
2	8L/min
3	10L/min
4	11.5L/min
5	12.9L/min
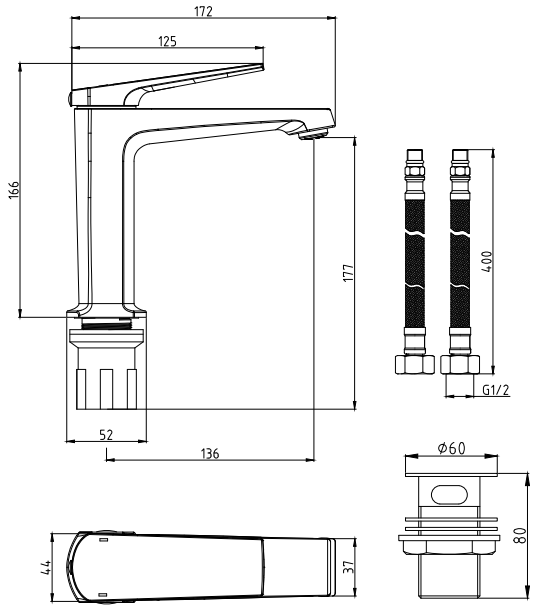
Drawing