Technical Data sheet

Jasper Wall Mounted Basin Mixer & Back Plate Chrome/ Matt Black/ Brushed Gold/ Brushed Nickel

JASP-315

15 Year Warranty

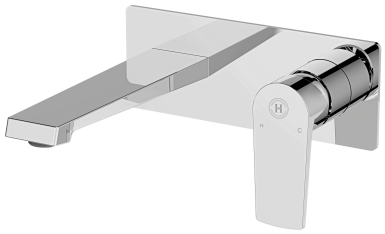

Specification

Brand	House Of Piccadilly
Range	The Jasper
Product code	JASP-315-PC/MB/BG/BN
Finish/Colour	CH/ MB/ BG/ BN
Product type	Wall Mounted Basin Mixer
Material	Brass
Connection Size	1/2"

Technical Information

Wall Mounted Basin Mixer With Back Plate

Box contents:

Wall Mounted Basin Mixer With Back Plate

Flow Rate

Pressure (Bar)	Average Flow Rate
1	6.7L/min
1.5	8.4L/min
2	9.5L/min
3	11.8L/min
4	13.7L/min
5	15.3L/min
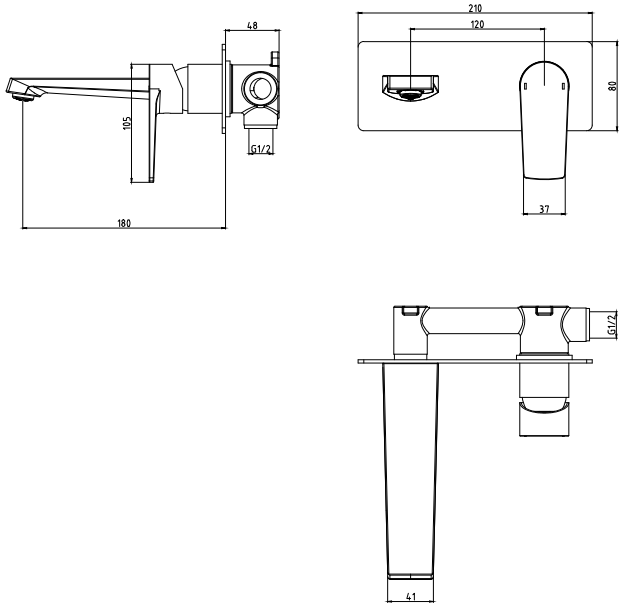
Drawing