Technical Data sheet

Jasper Wall Mounted Bath Filler Chrome/ Matt Black/ Brushed Gold/ Brushed Nickel

JASP-411

15 Year Warranty

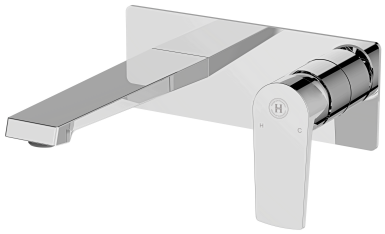

Specification

Brand	House Of Piccadilly
Range	The Jasper
Product code	JASP-411-PC/MB/BG/BN
Finish/Colour	PC/ MB/ BG/ BN
Product type	Wall Mounted Bath Filler
Material	Brass
Connection Size	3/4"

Technical Information

Wall Mounted Bath Filler And Back Plate

Box contents:

Wall Mounted Bath Filler And Back Plate

Flow Rate

Pressure (Bar)	Average Flow Rate
1	14.4L/min
1.5	17.6L/min
2	20.1L/min
3	25L/min
4	29L/min
5	33L/min
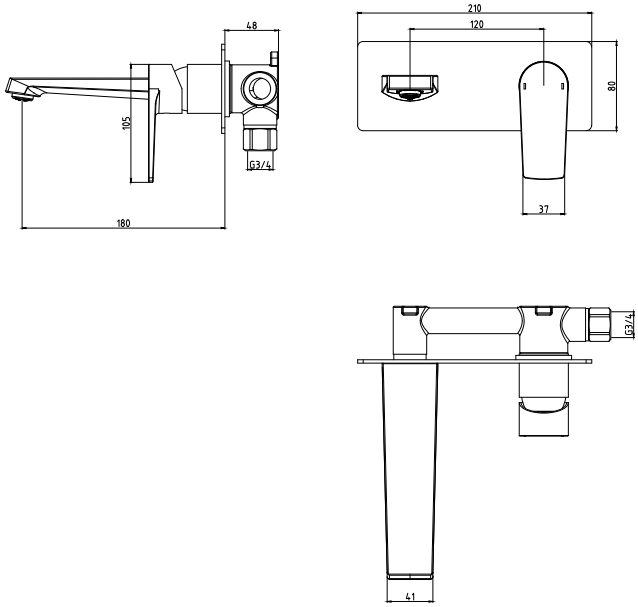
Drawing