Technical Data sheet

# The Jasper
# Wall Mounted Bath Filler & Plate

JASP-411

15 Year Warranty

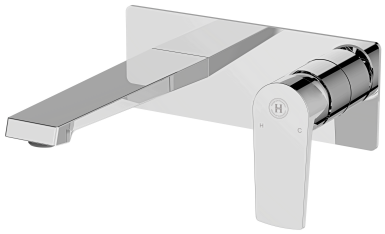

## Specification

| | |
|---|---|
| Brand | House Of Piccadilly |
| Range | The Jasper |
| Product code | JASP-411 |
| Finish/Colour | Chrome, Brushed Nickel |
| | Matt Black, Brushed Gold |
| Material | Brass |
| Connection Size | 3/4" |

## Technical Information

Wall Mounted Bath Filler And Back Plate

## Box contents:

Wall Mounted Bath Filler And Back Plate

## Flow Rate

| Pressure (Bar) | Average Flow Rate |
|---|---|
| 1 | 14.4L/min |
| 1.5 | 17.6L/min |
| 2 | 20.1L/min |
| 3 | 25L/min |
| 4 | 29L/min |
| 5 | 33L/min |
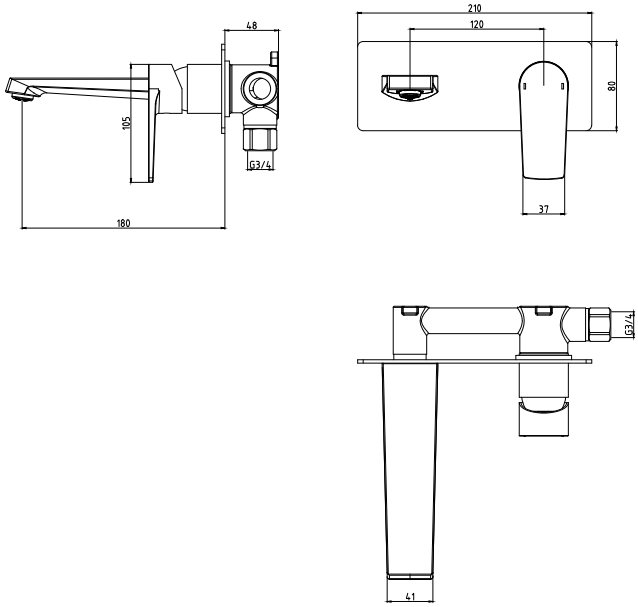
## Drawing