Technical Data sheet

The Jasper
2 Hole Deck Mounted Bath Mixer

JASP-413

15 Year Warranty

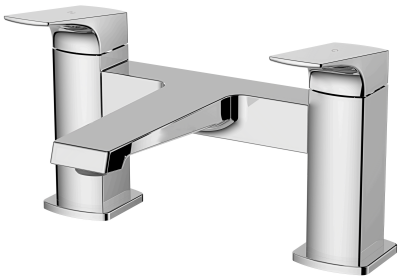

Specification

Brand	House Of Piccadilly
Range	The Jasper
Product code	JASP-413
Finish/Colour	Chrome, Brushed Nickel
	Brushed Gold, Matt Black
Material	Brass
Connection Size	3/4"

Technical Information

2 Hole Deck Mounted Bath Mixer

Box contents:

2 Hole Deck Mounted Bath Mixer

Flow Rate

Pressure (Bar)	Average Flow Rate
0.5	19.7L/min
1	26L/min
2	33.5L/min
3	40.6L/min
4	47.3L/min
5	54.5L/min
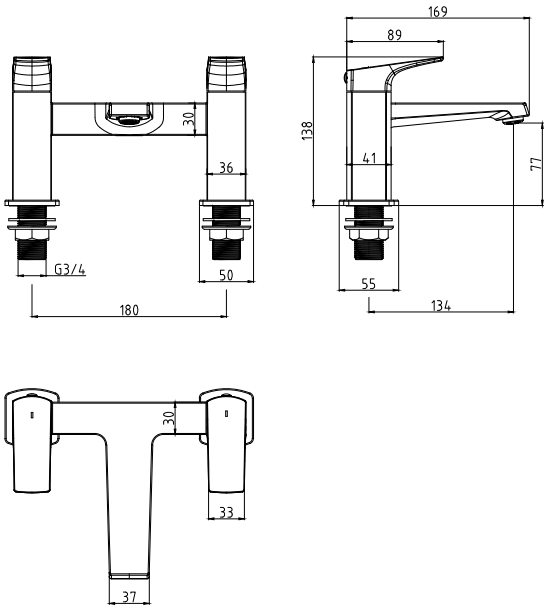
Drawing