Technical Data sheet

Iris Towel Rail
Brushed Gold & White

IRIS-1

5 Year Warranty

Specification

Brand	House of Piccadilly
Range	Iris
Product code	IRIS-1
Finish/Colour	Brushed Gold & White
Product type	Towel Rail
Material	Mild Steel
Bars	8

Technical Information

Height - 963 mm

Width - 673 mm

Depth - 230 mm

Net Weight -17 kg

Gross Weight - 20 kg

BTU - 2630

Watts - 771
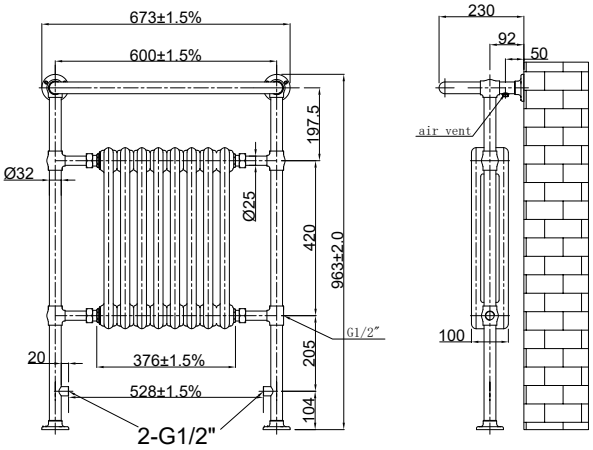
Drawing