Technical Data sheet

HOP Box with Round Plate (Knurled) Showering

SHOW-252

15 Year Warranty

Specification

Brand	House Of Piccadilly
Range	Showering
Product code	SHOW-252
Finish/Colour	Chrome, Brushed Gold
Product type	Matt Black, Brushed Gunemtal
Material	Brass / ABS

Technical Information

Concealed Thermostatic Shower Valve Box

Drawing

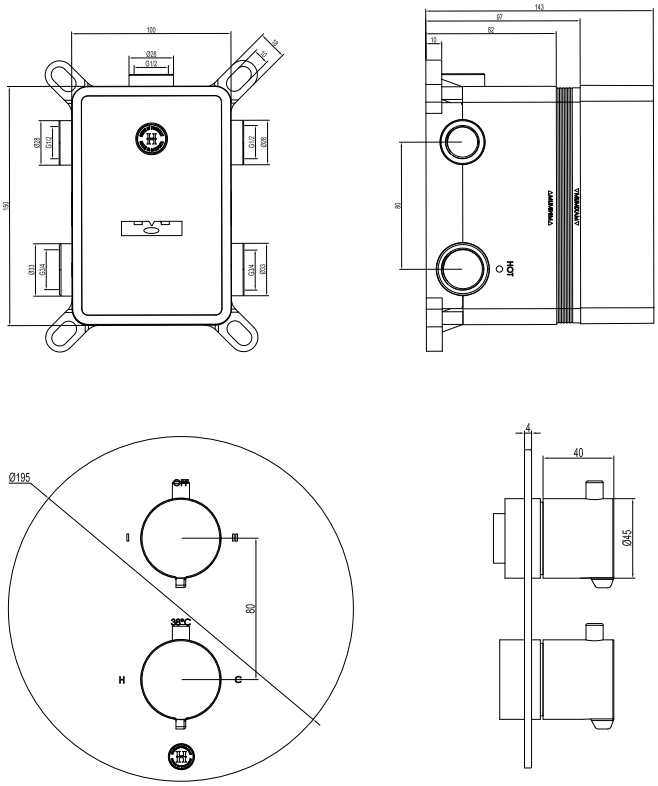

Box contents:

Concealed Thermostatic Shower Valve Box

Round Faceplate & Knurled Handles

Flow Rate Graph

NO.	Product Code	SHOW-222-VALVE			
	Supply Water Temperature		Cold Water（10-15）℃,Hot Water（60-65）℃		
	Cold Water Pressure（Bar)	Hot Water Pressure（Bar)	All Cold Water（L/min）	38℃（L/min）	All Hot Water（L/min）
1	0.5	0.5	8.4	10.5	7.6
2	1	1	12.1	15.2	10.9
3	2	2	17.2	21.9	15.5
4	3	3	21.1	27	19
5	4	4	24.2	31.3	22.1
6	5	5	27.3	34.8	24.7