# MP11PN
## ROUND MINI STOP TAP

## FEATURES

- Refer to the Meir website for warranty terms & conditions, and available finishes
- Solid stainless steel construction.
- Including a brass reducer adapter for the outlet from 1/2" to 3/8".

## CARE

- Do not install tapware using any form of acetone silicones.
- Do not apply physical items (such as tools) directlytoproduct.
- Never use house-hold or commercial detergents, citrus based cleaners, or abrasive cleaners.
- Clean using a mild washing soap solution rinsed, and dry with a soft cloth.
- Check for any product defects before installation.
- Refer to the installation manual for correct installation.

## SPECIFICATIONS

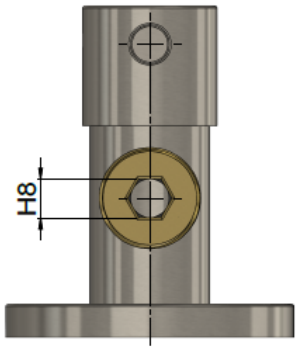


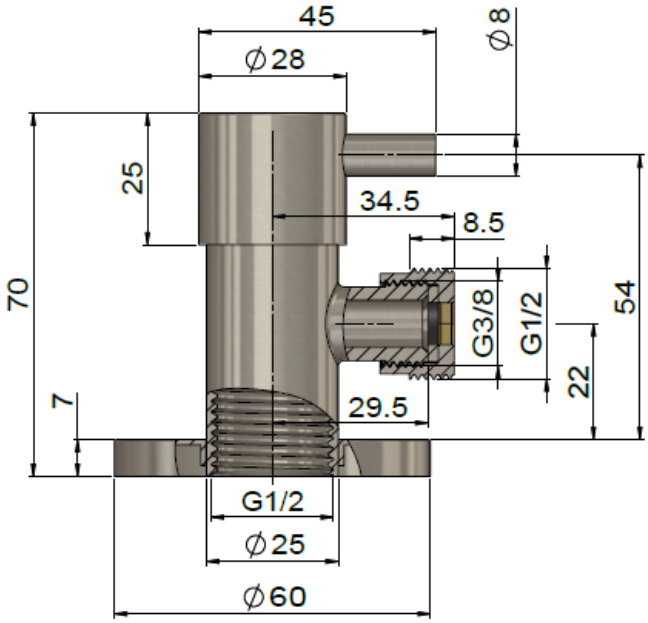


## CREDENTIALS

- WaterMark AS/NZS 3718:2005 **080065**

## EXPLODED VIEW
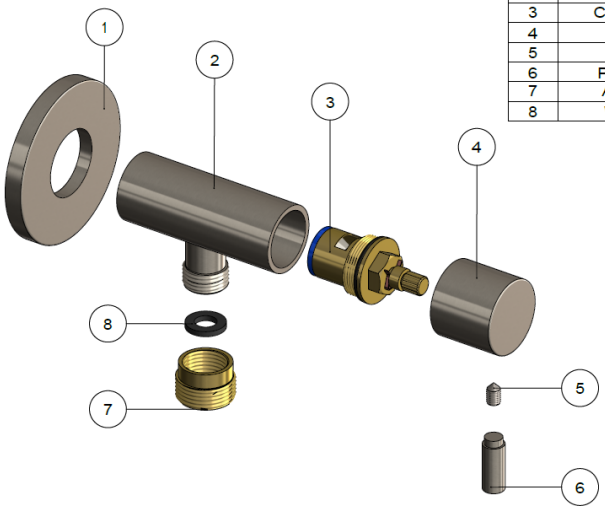
| No: | Part Name | Qty |
|---|---|---|
| 1 | Back Plate | 1 |
| 2 | Body | 1 |
| 3 | Casrtridge | 1 |
| 4 | Handle | 1 |
| 5 | Screw | 1 |
| 6 | Pin Lever | 1 |
| 7 | Adapter | 1 |
| 8 | Washer | 1 |