Technical Data sheet

The Saffron Lucite Bath

4-SAFFRON-1500-WH

5 Years Warranty

Specification

Brand	House of Piccadilly
Range	The Saffron
Product code	4-SAFFRON-1500-WH
Finish/Colour	White
Product type	Bath
Material	Lucite Acrylic

Technical Information

Freestanding Bath with Integrated Overflow

Capacity - 200L

Net Weight -44kg

Gross Weight - 40kg

Box contents:

Freestanding Bath with Integrated Overflow

Click Clack Waste

Drawing

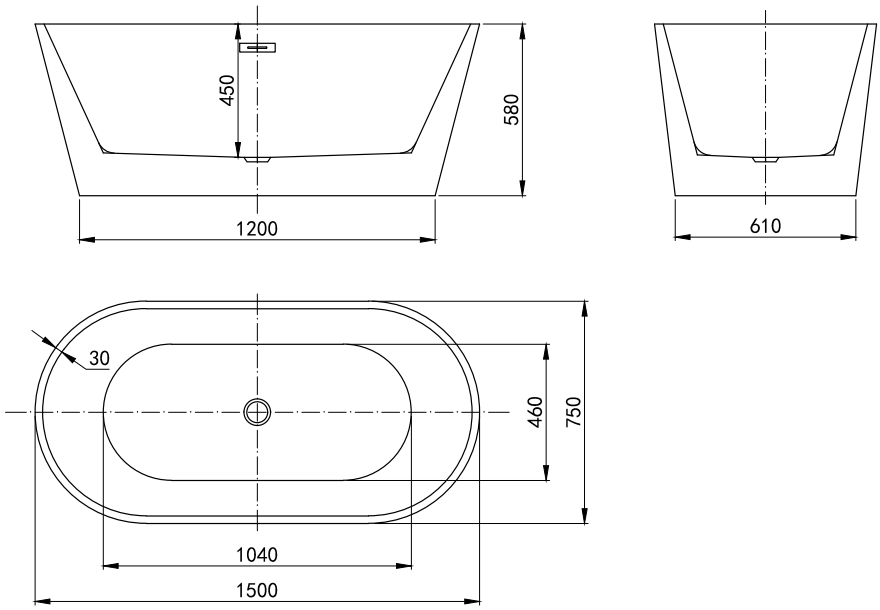

Technical Data sheet

The Saffron Lucite Bath

4-SAFFRON-1600-WH

5 Years Warranty

Specification

Brand	House of Piccadilly
Range	The Saffron
Product code	4-SAFFRON-1600-WH
Finish/Colour	White
Product type	Bath
Material	Lucite Acrylic

Technical Information

Freestanding Bath with Integrated Overflow

Capacity - 210L

Net Weight - 46kg

Gross Weight - 42kg

Box contents:

Freestanding Bath with Integrated Overflow

Click Clack Waste
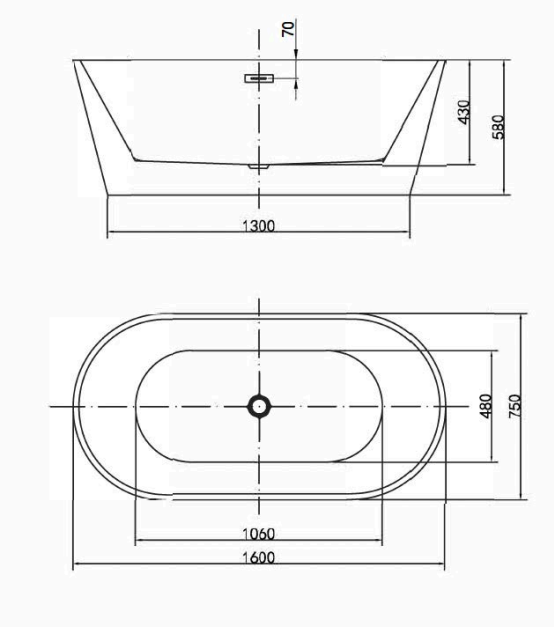
Drawing